KPI Analysis

www.huawei.com

Copyright © 2008 Huawei Technologies Co., Ltd. All rights reserved.

HUAWEI

Foreword

- KPI is short for Key Performance Index. It is:
  - The embodiment of the key performance of the system.
  - Expressed in an average value in a granularity period.
  - Related to all aspects, such as paging, network access, congestion, call drop, and handover.
- This course specifies the most commonly used KPIs in the actual network. Based on the analysis of the measurement points and constraints of these KPIs, optimization suggestions are provided for the trainees.

Copyright © 2008 Huawei Technologies Co., Ltd. All rights reserved. Page 2 HUAWEI

Traffic measurements or performance measurements involve the process of collecting the data of the BSC and analyzing it. Based on the analysis, you can observe the running status of the equipment and the usage of the signaling plane resources, user plane resources, and system resources. Traffic measurements provide reliable data for network planning, network monitoring, and network maintenance.

References

- 《 HUAWEI Traffic Statistics Manual》
- 《HUAWEI Data Configuration Manual》
- 《HUAWEI BSC Equipment Manual》

Copyright © 2008 Huawei Technologies Co., Ltd. All rights reserved.

Confidential Information of Huawei. No Spreading Without Permission

Objectives

- Upon completion of this course, you will be able to
  - Grasp the measurement point of all KPIs
  - Understand the Constraints of all KPIs
  - Master the method on KPI optimization

Copyright © 2008 Huawei Technologies Co., Ltd. All rights reserved.

Confidential Information of Huawei. No Spreading Without Permission

Content

- **Paging Success Rate**
- SDCCH Availability
- SDCCH Congestion Rate
- Immediate Assignment Success Rate
- SDCCH Call Drop Rate
- TCH Availability
- TCH Congestion Rate
- TCH Assignment Success Rate
- TCH Call Drop Rate
- Handover Success Rate
- Success Rate of Call Setup
- Call Setup Delay
- Call Complete Success Rate

Copyright © 2008 Huawei Technologies Co., Ltd. All rights reserved.

Confidential Information of Huawei. No Spreading Without Permission

Paging Success Rate

- Definition
  - The paging success rate is the ratio of the successfully sent circuit paging requests initiated by the MSC to all CS paging requests.
  - The paging requests consist of the CS paging requests initiated by the MSC and the co-ordinated CS paging requests sent on the Gs interface from the GPRS network.
  - Paging Success Rate = Successful Pagings on the Abis Interface (CS Service)/MSC-Initiated Paging Requests for CS Service
  - The paging success rate lays the foundation for the wireless service. A high paging success rate can improve multiple service KPIs on condition that the hardware capacity is certain.

Copyright © 2008 Huawei Technologies Co., Ltd. All rights reserved. HUAWEI

Confidential Information of Huawei. No Spreading Without Permission

Paging Success Rate

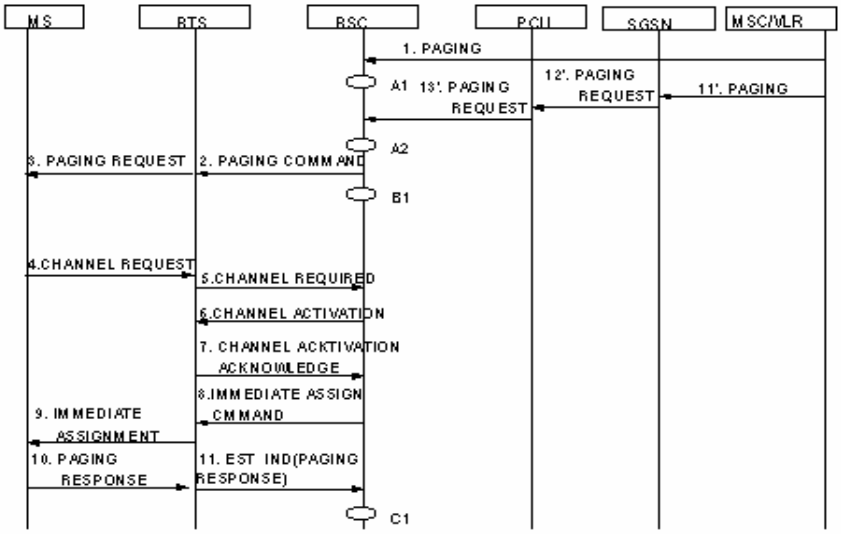

Copyright © 2008 Huawei Technologies Co., Ltd. All rights reserved. Page 7 HUAWEI

Measurement Point

A1: MSC-initiated paging requests for CS service

A2: Paging requests for CS service received by the BSC from the MSC on the Gs interface

B1: Paging requests for CS service on the Abis interface

C1: Successful pagings on the Abis interface (CS service)

Paging Success Rate

- Environmental factors that affect the paging success rate

Coverage	Blind coverage area, low coverage level, or cross coverage, which can not be solved through network optimization
Interference	Unavoidable interference can be the inter-network interference, interference from repeaters, or intra-network interference caused by aggressive frequency reuse
UL and DL balance	In areas where the UL level and DL level are imbalanced, the paging response message cannot be reported or the paging request cannot be received, thus leading to a low paging success rate.
Planning of location areas	The location areas are not properly segmented, and thus a large number of location updating requests are generated. An MS does not respond to pagings during location update. In addition, the SDCCH congestion occurs, and paging response messages cannot be reported. In this case, the paging success rate is very low.
Traffic volume	The traffic volume on the signaling channel is overhigh, and thus the paging requests cannot be sent or the paging response messages cannot be reported.

Copyright © 2008 Huawei Technologies Co., Ltd. All rights reserved.

Confidential Information of Huawei. No Spreading Without Permission

Paging Success Rate

- Network parameters that affect the paging success rate

Paging times and paging interval	If the number of paging times is too large, the BTS/BSC may be overloaded. In this case, many paging requests are discarded and the paging success rate decreases. If the paging interval is too long, the calling subscriber may hang up the phone before the broadcasting of the network voice announcement (in this announcement, the MSC of the called party informs the calling party that the subscriber he/she called is out of service). Later, a second call may be made; however, the calling subscriber may still hang up the phone before the called MS responds to the paging. This leads to a low paging success rate.
TMSI paging/IMSI paging	The paging message sent by the MSC carries the information of only one MS. It carries either the TMSI and IMSI or the IMSI. If the paging message carries the TMSI, the paging message sent by the BSC to the BTS also carries the TMSI. If the paging message carries only the IMSI, the paging message sent by the BSC to the BTS carries only the IMSI. The BTS, however, combines pagings so as to efficiently utilize the radio resources. The TMSI information of four subscribers or the IMSI information of two subscribers can be sent simultaneously on the PCH on the Um interface. Obviously, TMSI paging can improve the utilization of the PCH as well as the security. IMSI paging, however, is used only when the TMSIs of some MSs are considered as incorrect. This parameter is set on the CN side.

Copyright © 2008 Huawei Technologies Co., Ltd. All rights reserved. HUAWEI

Confidential Information of Huawei. No Spreading Without Permission

Paging Success Rate

- Network parameters that affect the paging success rate

Paging based on location area/all cell paging	On the live network, paging is performed on the basis of the location area. All cell paging has a huge impact on the BSC, and paging overload may occur and the paging success rate decreases.
T3212	If this parameter is set to a low value, the overall service performance of the network is improved; however, the signaling traffic increases. Heavy signaling traffic decreases the utilization of radio resources, causes congestion on the signaling channels, and decreases the paging success rate. If this parameter is set to a high value, the network may not update the location area even though the MS has moved to another location area. In this case, the paging response is not made in the original location area, thus leading to a low paging success rate.
IMSI implicit detach timer	If the MSC detects no message from the MS before this timer expires, the MSC sets the status of the MS to power off. Then, any pagings related to this single MS are not handled. If this timer is set to a higher value, the system cannot know the status of the MS in real time, and some paging requests are sent without response messages. This results in a low paging success rate. If this timer is set to a lower value, the system may set the status of many MSs to power off. Generally, this timer is set according to the value of the T3212. The value of this timer should be over two times greater than that of the T3212.

Copyright © 2008 Huawei Technologies Co., Ltd. All rights reserved.

Confidential Information of Huawei. No Spreading Without Permission

Paging Success Rate

- Network parameters that affect the paging success rate

CGI configuration on the MSC side and on the BSC side	If the CGI configuration on the BSC side is inconsistent with that on the MSC side, paging failures may occur. Thus, the paging success rate decreases.
RACH Min.Access Level	The MS responds to a paging request by sending an access burst; however, if this threshold is set to a higher value, the system regards this access as an invalid access and no decoding is performed. Thus, the paging success rate decreases.
RXLEV_ACCESS_MIN	If this parameter is set to a high value, many MSs cannot perform cell selection. Thus, paging messages cannot be analyzed, and no response is made. In this case, the paging success rate decreases. If this parameter is set to a lower value, the MSs at the edge of the cell can analyze the paging messages. They attempt to respond to the paging message by sending an access burst; however, the BTS cannot detect or analyze the burst. Thus, the access fails and the paging success rate decreases.

Copyright © 2008 Huawei Technologies Co., Ltd. All rights reserved.

Confidential Information of Huawei. No Spreading Without Permission

Paging Success Rate

- Network parameters that affect the paging success rate

BS_AG_BLKS_RES	This parameter specifies the number of CCCH blocks reserved for the AGCH. This parameter affects the paging response time of an MS and the system performance. When the PCH is overloaded, this parameter can be set to a lower value.
BS-PA-MFRAMS	This parameter specifies the number of multiframes in a cycle on the paging sub-channel. When BS-PA-MFRAMS increases, the number of paging sub-channels increases, thus reducing the number of subscribers served by each paging sub-channel and prolonging the average work time of the MS battery. The delay of paging messages increases; however, the system performance drops as MFR increases. This parameter should be set on the basis that the paging channel is not overloaded. In addition, the value of the parameter should be as small as possible.
MS MAX Retrans	This parameter specifies the maximum number of Channel Request messages that can be sent by an MS in an immediate assignment procedure. After the MS initiates the immediate assignment procedure, it always listens to the messages on the BCCH and all the common control channels (CCCHs) in the CCCH group to which the MS belongs. If the MS does not receive the Immediate Assignment message, the MS retransmits the Channel Request message at a specified interval. Provided that no congestion occurs on the signaling channel, the higher the value of this parameter is, the higher the paging success rate is.

Copyright © 2008 Huawei Technologies Co., Ltd. All rights reserved.

Confidential Information of Huawei. No Spreading Without Permission

Paging Success Rate

- Other KPIs that affect the paging success rate

Congestion ratio on SDCCH	You can increase the value of MS MAX Retrans to improve the success rate of paging. The BSC may assign multiple SDCCHs to a single MS that initiates multiple Channel Requests. Thus, the congestion ratio on the SDCCH is increased. If the congestion ratio on the SDCCH is increased, the possibility for the MS to obtain an SDCCH is decreased. Thus, paging response cannot be made, and the paging success rate decreases.
Call drop KPIs	The value of the RACH Min.Access Level and the RXLEV_ACCESS_MIN may be decreased to improve the success rate of paging. If these two parameters are set to low values, the MSs in poor coverage areas can access the system. The signal quality, however, is poor in those areas, and call drops are likely to occur. Thus, the call drop KPIs are deteriorated.

Copyright © 2008 Huawei Technologies Co., Ltd. All rights reserved.

Confidential Information of Huawei. No Spreading Without Permission

Content

- Paging Success Rate
- **SDCCH Availability**
- SDCCH Congestion Rate
- Immediate Assignment Success Rate
- SDCCH Call Drop Rate
- TCH Availability
- TCH Congestion Rate
- TCH Assignment Success Rate
- TCH Call Drop Rate
- Handover Success Rate
- Success Rate of Call Setup
- Call Setup Delay
- Call Complete Success Rate

Copyright © 2008 Huawei Technologies Co., Ltd. All rights reserved.

Confidential Information of Huawei. No Spreading Without Permission

SDCCH Availability

- Definition
  - SDCCH availability indicates the ratio of the number of available SDCCHs to the number of configured SDCCHs in a measurement period.
  - In case of SDCCH dynamic adjustment, the number of configured SDCCHs refers to the number of dynamically configured SDCCHs, that is, the actual number of SDCCHs after dynamic adjustment.
  - SDCCH Availability = (Mean Number of Available Channels (SDCCH) (900/850 Cell) + Mean Number of Available Channels (SDCCH) (1800/1900 Cell)) / (Mean Number of Dynamically Configured Channels (SDCCH) (900/850 Cell) + Mean Number of Dynamically Configured Channels (SDCCH) (1800/1900 Cell)) x 100%

Copyright © 2008 Huawei Technologies Co., Ltd. All rights reserved.

Confidential Information of Huawei. No Spreading Without Permission

SDCCH Availability

- Measurement Point
  - The BSC measures the number of available SDCCHs or dynamically configured SDCCHs every five seconds. At the end of the measurement period, the average number of available SDCCHs or dynamically configured SDCCHs can be obtained by dividing the accumulative value of each sampling point by the number of sampling times.
  - Available SDCCHs involve only SDCCHs that are in Idle or Using state. The SDCCHs that are blocked or shut down though the site maintenance terminal are regarded as unavailable.
  - The number of configured SDCCHs specifies the number of dynamically adjusted SDCCHs.

Copyright © 2008 Huawei Technologies Co., Ltd. All rights reserved. Page 16 HUAWEI

SDCCH availability is one of the resource utilization KPIs. When the SDCCH availability is low, available SDCCHs may be insufficient for the services. High congestion ratio on SDCCH occurs, and accessing the network is difficult, thus adversely affecting user experience.

SDCCH Availability

- Sampling Methods
  - SDCCH availability is one of traffic measurement KPIs, which can be measured through registration or report of the related traffic measurement tasks. The SDCCH availability reflects the conditions of the SDCCH, and thus it cannot be measured through drive tests.
- Factors That Affect SDCCH Availability
  - Manually blocking SDCCHs decreases the value of this KPI.
  - Equipment failure also affects the value of this KPI.

Copyright © 2008 Huawei Technologies Co., Ltd. All rights reserved.

Confidential Information of Huawei. No Spreading Without Permission

Content

- Paging Success Rate
- SDCCH Availability
- **SDCCH Congestion Rate**
- Immediate Assignment Success Rate
- SDCCH Call Drop Rate
- TCH Availability
- TCH Congestion Rate
- TCH Assignment Success Rate
- TCH Call Drop Rate
- Handover Success Rate
- Success Rate of Call Setup
- Call Setup Delay
- Call Complete Success Rate

Copyright © 2008 Huawei Technologies Co., Ltd. All rights reserved.

Confidential Information of Huawei. No Spreading Without Permission

SDCCH Congestion Rate

- Definition
  - Congestion ratio on SDCCH is one of the most important accessibility KPIs in the CS service. Except for the SDCCH assignment failure caused by the TRX fault or failure of other hardware, the congestion ratio on SDCCH, to a certain extent, reflects the usage of the SDCCH.
  - The congestion ratio on SDCCH can be obtained through the traffic measurement results. It reflects the SDCCH collisions due to insufficient resources. The recommended formula used for calculating this KPI is as follows:
  - Congestion Ratio on SDCCH = Failed SDCCH Seizures due to Busy SDCCH/SDCCH Seizure Requests x 100%

Copyright © 2008 Huawei Technologies Co., Ltd. All rights reserved. HUAWEI

If the congestion ratio on SDCCH is high, MSs cannot access the signaling channel, and thus the services requested by MSs fail.

Confidential Information of Huawei. No Spreading Without Permission

SDCCH Congestion Rate

- Measurement point of SDCCH Congestion Rate during immediate assignment.

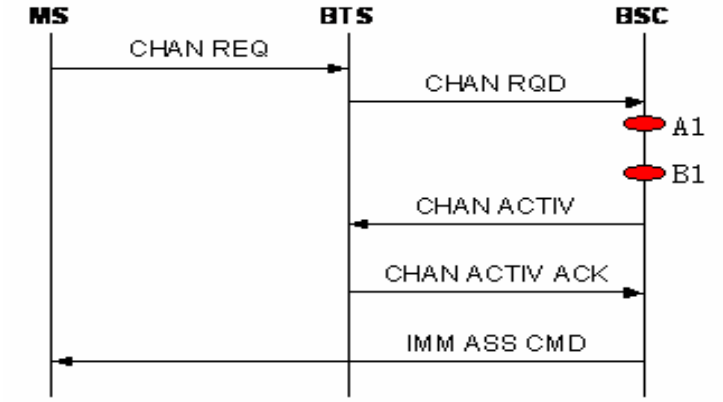

Copyright © 2008 Huawei Technologies Co., Ltd. All rights reserved. Page 20 HUAWEI

Measurement Point:

A1: Channel request for immediate assignment

B1: Channel all busy or no channel configured during immediate assignment.

SDCCH Congestion Rate

- Measurement point of SDCCH Congestion Rate during inner-BSC Handover

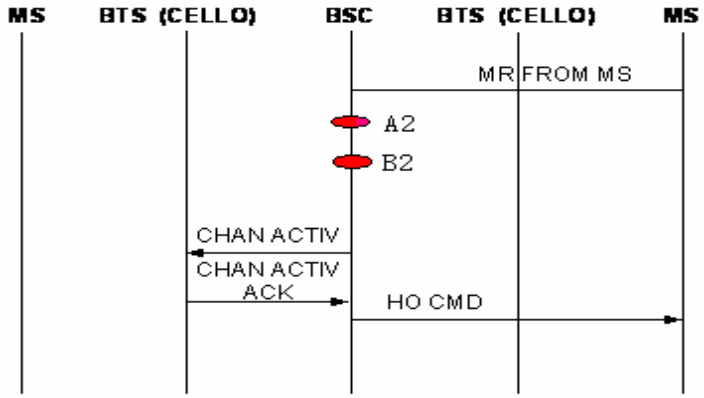

Copyright © 2008 Huawei Technologies Co., Ltd. All rights reserved. Page 21 HUAWEI

Measurement Point:

A2: Handover request during inner-BSC handover

B2: Handover failure during inner-BSC handover (no channel available) （SDCCH）[including inner-cell inner BSC handover and incoming-cell inner-BSC handover]

SDCCH Congestion Rate

- Measurement point of SDCCH Congestion Rate during inter-BSC Handover.

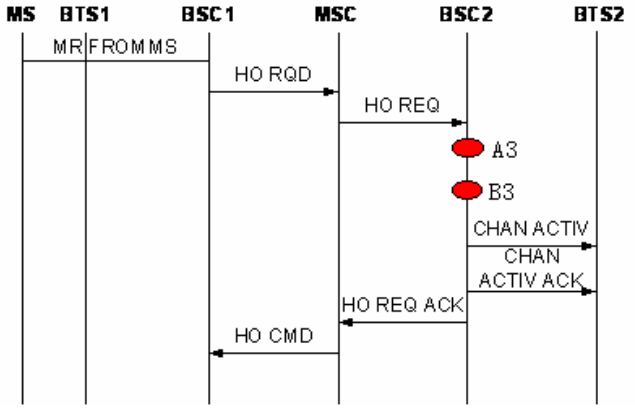

Copyright © 2008 Huawei Technologies Co., Ltd. All rights reserved. Page 22 HUAWEI

Measurement Point:

A3: Handover request during inter-BSC handover (SDCCH)

B3: Handover failure during inter-BSC handover (no channel available) (SDCCH)

SDCCH Congestion Rate

- Measurement Point
  - A1 + A2 + A3: SDCCH Seizure Requests (total)
  - B1 + B2 + B3: Failed SDCCH Seizures due to Busy SDCCH
- The previous figure shows that the denominator in the formula provides the total number of requests for the SDCCH, involving the requests in the immediate assignment procedure and SDCCH handover procedure. The numerator provides the number of times when no idle SDCCHs can be assigned. The measurement points for both the denominator and the numerator are specific.

Copyright © 2008 Huawei Technologies Co., Ltd. All rights reserved.

Confidential Information of Huawei. No Spreading Without Permission

SDCCH Congestion Rate

- Sampling Methods
  - Congestion ratio on SDCCH is one of traffic measurement KPIs, which can be measured through registration or report of the related traffic measurement KPIs. Generally, this KPI is not measured through drive tests because of the limited samples, incomplete test routes, and the irregularity in the occurrence of the congestion in areas with low traffic.

Copyright © 2008 Huawei Technologies Co., Ltd. All rights reserved. Page 24 HUAWEI

Constraints on Sampling Methods

Avoid sampling on occasions where burst traffic occurs on the SDCCH. The burst traffic can be caused by the following reasons: improper segmentation of location areas, occurrences of numerous location updating requests, and burst of group short messages.

Avoid sampling on occasions where the transmission quality on the Abis interface is weak and transmission links on the Abis interface are unstable.

Avoid sampling on occasions where failures occur to a lot of equipment.

SDCCH Congestion Rate

- Parameters and Functions That Affect This KPI
  - RACH Min. Access Level
    - If this parameter is set to a lower value, MSs at the edge of the cell can access the network. Thus, the total number of requests for the SDCCH increases, and SDCCH congestion occurs. If this parameter is set to a higher value, the cell coverage is manually decreased, and MSs at the edge of the cell cannot access the network.

Copyright © 2008 Huawei Technologies Co., Ltd. All rights reserved.

Confidential Information of Huawei. No Spreading Without Permission

SDCCH Congestion Rate

- Parameters and Functions That Affect This KPI
  - Random Access Error Threshold
    - If this parameter is set to a lower value, some random accesses are regarded as normal channel requests and the SDCCHs are assigned accordingly. Thus, SDCCH congestion occurs. If this parameter is set to a higher value, accessing the network is difficult, thus adversely affecting user experience.
  - MS MAX Retrans
    - If this parameter is set to a higher value, the number of channel request retransmissions is great, and multiple SDCCHs may be assigned to one service. Thus, SDCCH congestion occurs.

Copyright © 2008 Huawei Technologies Co., Ltd. All rights reserved.

Confidential Information of Huawei. No Spreading Without Permission

SDCCH Congestion Rate

- Parameters and Functions That Affect This KPI
  - SDCCH Dynamic Adjustment (which may increase the Congestion Ration on TCH)
    - This function can mitigate the SDCCH congestion. The baseline data can be obtained only when this function is enabled. By default, this function is enabled.
  - Use Imm_Ass Retransmit Parameter
    - This function can decrease the retransmitted channel requests sent by the MS before the MS receives the immediate assignment command. Thus, the invalid usage of the SDCCH decreases, and so does the congestion ratio on SDCCH. Huawei recommends that this function be enabled.

Copyright © 2008 Huawei Technologies Co., Ltd. All rights reserved.

Confidential Information of Huawei. No Spreading Without Permission

Content

- Paging Success Rate
- SDCCH Availability
- SDCCH Congestion Rate
- **Immediate Assignment Success Rate**
- SDCCH Call Drop Rate
- TCH Availability
- TCH Congestion Rate
- TCH Assignment Success Rate
- TCH Call Drop Rate
- Handover Success Rate
- Success Rate of Call Setup
- Call Setup Delay
- Call Complete Success Rate

Copyright © 2008 Huawei Technologies Co., Ltd. All rights reserved.

Confidential Information of Huawei. No Spreading Without Permission

Immediate Assignment Success Rate

- Definition
  - Success rate of call setup (immediate assignment) indicates the ratio of successful accesses to the signaling channel to all channel requests. It involves the procedure from the initiation of the channel request message to the reception of the establish indication message.
  - Success rate of call setup (immediate assignment) is one of the most important accessibility KPIs, which reflects the probability of successful accesses to the signaling channel. This KPI directly affects user experience.
  - Success Rate of Call Setup (Immediate Assignment) = (Call Setup Indications (Circuit Service)/Channel Requests (Circuit Service)) x 100%

Copyright © 2008 Huawei Technologies Co., Ltd. All rights reserved.

Confidential Information of Huawei. No Spreading Without Permission

Immediate Assignment Success Rate

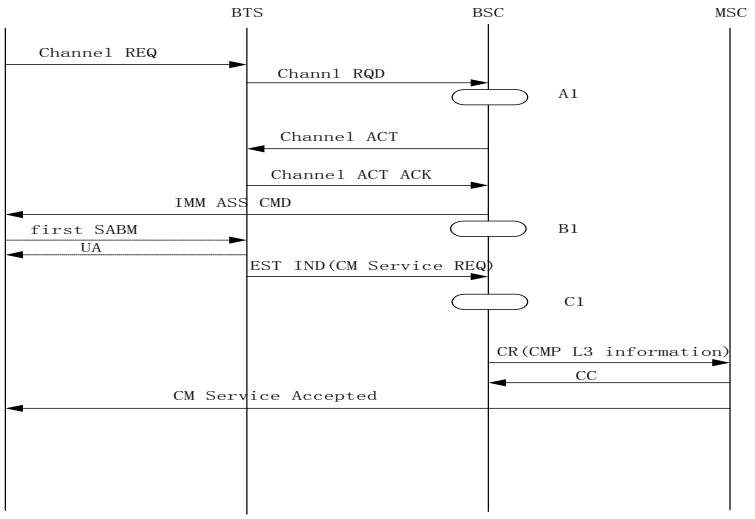

Copyright © 2008 Huawei Technologies Co., Ltd. All rights reserved. Page 30 HUAWEI

Measurement Point:

A1——Channel request during immediate assignment（circuit service）

B1——Immediate assignment command

C1——Success of immediate assignment（Establish indication（circuit service））

Immediate Assignment Success Rate

- Sampling Methods
  - Success rate of call setup (immediate assignment) is one of traffic measurement KPIs, which can be measured through registration or report of the related traffic measurement KPIs. Generally, this KPI is not measured through drive tests because of the limited samples and incomplete test routes.
  - Currently, manufacturers and carriers use different formulas for calculating this KPI, thus leading to different values of this KPI. Therefore, in actual measurement, you should register the specific counters and use an appropriate formula to calculate the value of the KPI.

Copyright © 2008 Huawei Technologies Co., Ltd. All rights reserved.

Confidential Information of Huawei. No Spreading Without Permission

Immediate Assignment Success Rate

- Constraints on Sampling Methods
  - Avoid sampling on occasions where burst traffic occurs.
- Constraints on Sampling Environment
  - Coverage
    - Such coverage problems as blind coverage area, low coverage level, and cross coverage, which cannot be solved through network optimization, exist in the sampling environment.
  - Interference
    - Unavoidable inter-network interference, interference from repeaters, or high and unavoidable intra-network interference caused by aggressive frequency reuse exists in the sampling environment.

Copyright © 2008 Huawei Technologies Co., Ltd. All rights reserved.

Confidential Information of Huawei. No Spreading Without Permission

Immediate Assignment Success Rate

- Constraints on Sampling Environment
  - Transmission
    - Avoid sampling on occasions where the transmission quality on the Abis interface is poor and transmission links on the Abis interface are unstable.
  - Device
    - Avoid sampling on occasions where a large number of terrestrial resources are unavailable or devices are faulty.
  - Traffic volume
    - The traffic volume is unevenly distributed in the network. Capacity expansion is not implemented in some cells where the congestion ratio on SDCCH is high.

Copyright © 2008 Huawei Technologies Co., Ltd. All rights reserved.

Confidential Information of Huawei. No Spreading Without Permission

Immediate Assignment Success Rate

- Factors That Affect the Success Rate of Call Setup (Immediate Assignment)

Formula	Influencing Factors			
	SDCCH Congestion	Channel Required Flow Control	CHAN ACTIV NACK Messages Sent by BTS (SDCCH)	Factors on Um Interface
Success Rate of Call Setup (Immediate Assignment) = (Successful Immediate Assignments/Immediate Assignment Requests) x 100%	√	√	√	√
Success Rate of Call Setup (Immediate Assignment) = (Successful Immediate Assignments/((Immediate Assignment Requests – (Immediate Assignment Commands - Successful Immediate Assignments))) x 100%	√	√	√	
Success Rate of Call Setup (Immediate Assignment) = (Successful Immediate Assignments/Immediate Assignment Commands) x 100%				√

Copyright © 2008 Huawei Technologies Co., Ltd. All rights reserved.

Confidential Information of Huawei. No Spreading Without Permission

Immediate Assignment Success Rate

- Parameters That Affect the Success Rate of Call Setup (Immediate Assignment)
  - MS MAX Retrans
    - This parameter determines the maximum number of channel request messages sent by the MS. It has a great impact on the success rate of call setup (immediate assignment). Therefore, the value of the parameter should be as small as possible.

Copyright © 2008 Huawei Technologies Co., Ltd. All rights reserved.

Confidential Information of Huawei. No Spreading Without Permission

Immediate Assignment Success Rate

- Parameters That Affect the Success Rate of Call Setup (Immediate Assignment)
  - MS Min.Access Level
    - This parameter affects the coverage area. If this parameter is set to a higher value, the actual coverage area of the network becomes small; if this parameter is set to a lower value, call drops are likely to occur because of invalid access or too weak access signals, thus decreasing the success rate of call setup (immediate assignment).

Copyright © 2008 Huawei Technologies Co., Ltd. All rights reserved.

Confidential Information of Huawei. No Spreading Without Permission

Immediate Assignment Success Rate

- Parameters That Affect the Success Rate of Call Setup (Immediate Assignment)
  - RACH Min Access Level
    - This parameter affects the coverage area. If this parameter is set to a higher value, the actual coverage area of the network becomes small; if this parameter is set to a lower value, call drops are likely to occur because of invalid access or too weak access signals, thus decreasing the success rate of call setup (immediate assignment).

Copyright © 2008 Huawei Technologies Co., Ltd. All rights reserved.

Confidential Information of Huawei. No Spreading Without Permission

Immediate Assignment Success Rate

- Parameters That Affect the Success Rate of Call Setup (Immediate Assignment)
  - RACH Busy Threshold
    - This parameter affects the coverage area. If this parameter is set to a higher value, the actual coverage area of the network becomes small; if this parameter is set to a lower value, call drops are likely to occur because of invalid access or too weak access signals, thus decreasing the success rate of call setup (immediate assignment).

Copyright © 2008 Huawei Technologies Co., Ltd. All rights reserved.

Confidential Information of Huawei. No Spreading Without Permission

Immediate Assignment Success Rate

- Parameters That Affect the Success Rate of Call Setup (Immediate Assignment)
  - Tx-integer
    - This parameter mainly affects the execution efficiency of the immediate assignment procedure. When the success rate of call setup (immediate assignment) is low, the value of this parameter can be set to a higher value.

Copyright © 2008 Huawei Technologies Co., Ltd. All rights reserved.

Confidential Information of Huawei. No Spreading Without Permission

Immediate Assignment Success Rate

- Parameters That Affect the Success Rate of Call Setup (Immediate Assignment)
  - Random Access Error Threshold
    - This parameter affects the coverage area. If this parameter is set to a higher value, the actual coverage area of the network becomes small; if this parameter is set to a lower value, call drops are likely to occur because of invalid access or too weak access signals, thus decreasing the success rate of call setup (immediate assignment).

Copyright © 2008 Huawei Technologies Co., Ltd. All rights reserved.

Confidential Information of Huawei. No Spreading Without Permission

Immediate Assignment Success Rate

- Functions That Affect the Success Rate of Call Setup (Immediate Assignment)
  - Use Imm_Ass Retransmit Parameter
    - The BTS re-sends the IMM ASS CMD message to the MS, thus decreasing the number of channel request messages retransmitted by the MS and improving the success rate of call setup (immediate assignment). Huawei recommends that this function be enabled.

Copyright © 2008 Huawei Technologies Co., Ltd. All rights reserved.

Confidential Information of Huawei. No Spreading Without Permission

Immediate Assignment Success Rate

- Functions That Affect the Success Rate of Call Setup (Immediate Assignment)
  - SDCCH dynamic adjustment
    - This function should be enabled to improve the success rate of call setup (immediate assignment).
  - TCH Immediate Assignment
    - This function should be enabled to improve the success rate of call setup (immediate assignment).

Copyright © 2008 Huawei Technologies Co., Ltd. All rights reserved.

Confidential Information of Huawei. No Spreading Without Permission

Immediate Assignment Success Rate

- Constraints between KPIs:
  - Paging success rate
    - If you increase the MS MAX Retrans to improve the paging success rate, the success rate of call setup (immediate assignment) is decreased. In this case, the value of the success rate of call setup (immediate assignment) cannot be guaranteed (theoretically, the impact of retransmitted channel requests on the success rate of call setup (immediate assignment) cannot be eliminated). Therefore, the number of retransmitted channel requests should be reduced on the basis that parameter setting, environment, and functions are considered.

Copyright © 2008 Huawei Technologies Co., Ltd. All rights reserved. Page 43 HUAWEI

Parameters that affect the success rate of call setup (immediate assignment) also have an impact on paging success rate. Therefore, the success rate of call setup (immediate assignment) and paging success rate are interrelated.

Content

- Paging Success Rate
- SDCCH Availability
- SDCCH Congestion Rate
- Immediate Assignment Success Rate
- **SDCCH Call Drop Rate**
- TCH Availability
- TCH Congestion Rate
- TCH Assignment Success Rate
- TCH Call Drop Rate
- Handover Success Rate
- Success Rate of Call Setup
- Call Setup Delay
- Call Complete Success Rate

Copyright © 2008 Huawei Technologies Co., Ltd. All rights reserved.

Confidential Information of Huawei. No Spreading Without Permission

SDCCH Call Drop Rate

- Definition
  - SDCCH Call Drop Rate indicates the probability of call drops that occur when MSs occupy SDCCHs.
  - SDCCH Call Drop Rate is one of accessibility KPIs. This KPI reflects the seizure condition of signaling channels. If the value of this KPI is high, user experience is adversely affected.
  - SDCCH Call Drop Rate = Call Drops on SDCCH/ Successful SDCCH Seizures

Copyright © 2008 Huawei Technologies Co., Ltd. All rights reserved.

Confidential Information of Huawei. No Spreading Without Permission

SDCCH Call Drop Rate

- Measurement Point of Call Drops on SDCCH
  - Every time the immediate assignment procedure or SDCCH handover procedure fails because of any reason after the MS accesses the SDCCH assigned by the BSC, the BSC measures the number of call drops on the SDCCH.
  - After the MS seizes the SDCCH, the call drops due to various reasons. In this case, the BSC measures the number of call drops on the SDCCH.
  - Besides the measurement, the BSC sends the CLEAR REQUEST message to the MSC.

Copyright © 2008 Huawei Technologies Co., Ltd. All rights reserved.

Confidential Information of Huawei. No Spreading Without Permission

SDCCH Call Drop Rate

- Measurement Point of successful SDCCH seizer

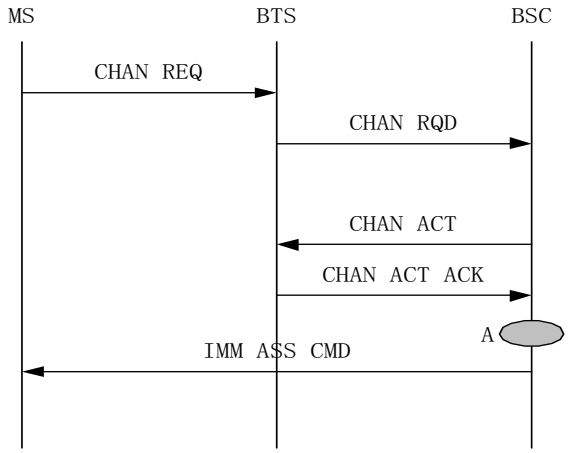

Copyright © 2008 Huawei Technologies Co., Ltd. All rights reserved.

In immediate assignment, the measurement point of successful SDCCH seizer is point A

Confidential Information of Huawei. No Spreading Without Permission

SDCCH Call Drop Rate

- Measurement Point of successful SDCCH seizer

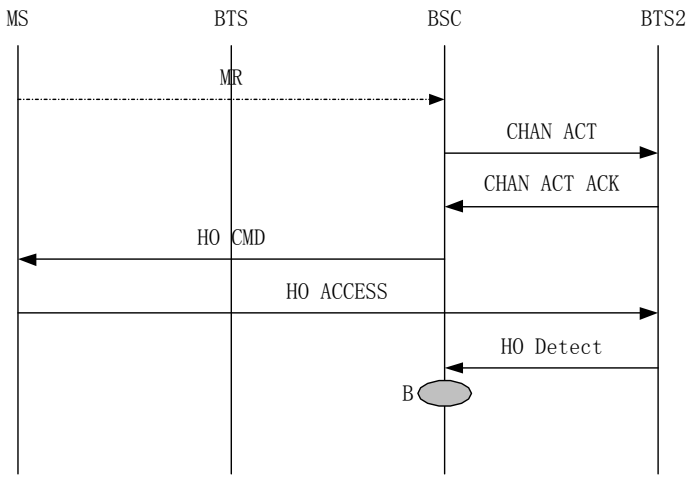

Copyright © 2008 Huawei Technologies Co., Ltd. All rights reserved. Page 48 HUAWEI

In inner-BSC handover, the measurement point of successful SDCCH seizer is point B

SDCCH Call Drop Rate

- Measurement Point of successful SDCCH seizer

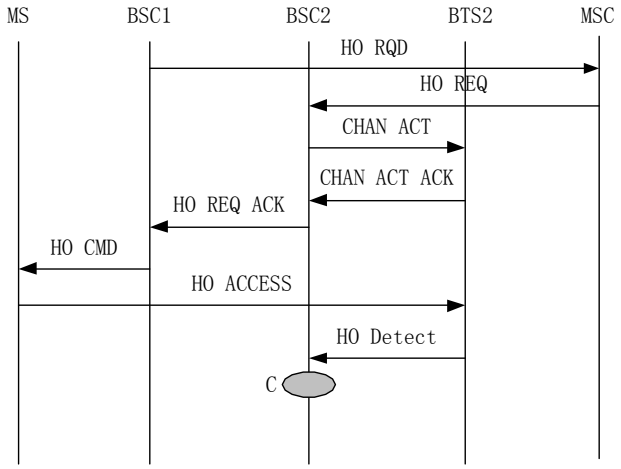

Copyright © 2008 Huawei Technologies Co., Ltd. All rights reserved. HUAWEI

In inter-BSC handover, the measurement point of successful SDCCH seizer is point C

Confidential Information of Huawei. No Spreading Without Permission

SDCCH Call Drop Rate

- Environment Factors That Affect SDCCH Call Drop Rate

Coverage	Blind coverage area, low coverage level, or cross coverage, which can not be solved through network optimization
Interference	Unavoidable inter-network interference, interference from repeaters, or high and unavoidable intra-network interference caused by aggressive frequency reuse
Transmission	Poor transmission quality and unstable transmission links over the Abis interface
Antenna System	High VSWR due to feeders leads to the reduction in the transmit power and in the receiver sensitivity. In consequence, the network has poor coverage and call drops occur.
Device	A large number of unavailable terrestrial resources or faulty devices

Copyright © 2008 Huawei Technologies Co., Ltd. All rights reserved. Page 50 HUAWEI

SDCCH Call Drop Rate is one of traffic measurement KPIs and can be obtained through traffic measurement. There is a great difference between the drive test data and the actual SDCCH Call Drop Rate . Therefore, SDCCH Call Drop Rate can not be measured through drive tests.

SDCCH Call Drop Rate

- Network parameters that affect SDCCH call drop rate

RXLEV_ACCESS_MIN, RACH Min.Access Level, and RACH Busy Threshold	These parameters relate to the network coverage and the balance between the uplink and the downlink. If these parameters are set to small values, MSs in the areas of poor coverage can access the network and call drops are likely to occur. If the settings of these parameters lead to the imbalance between the uplink and the downlink, call drops are likely to occur. For BTS3X and later releases, the setting of RACH Busy threshold does not affect the normal access of the MS.
BA2 Table	If neighbor cell relations are incomplete, some handovers cannot be performed and thus call drops occur. Therefore, complete neighbor cell relations must be defined. If the SDCCH handover does not take place, Call Drop Rate on SDCCH is not affected regardless of whether the BA2 table is complete.
T200 SDCCH_SAPI0, T200 SACCH SDCCH, T200 SDCCH_SAPI3, and N200 of SDCCH	After the SDCCH is seized, the transmit end must set the timer T200 when it sends a signaling message. When the timer expires, the transmit end regards that the receive end does not receive the message, and then the transmit end retransmits the message. The number of retransmissions depends on N200. If T200 x N200 is set to a small value, the timer expires before the transmit end receives an acknowledgement from the receive end. In this case, a forced call drop occurs. Therefore, the call drops on SDCCHs increase.

Copyright © 2008 Huawei Technologies Co., Ltd. All rights reserved.

Confidential Information of Huawei. No Spreading Without Permission

SDCCH Call Drop Rate

- Network function and Other KPIs that related with SDCCH call drop rate

PBT, transmit diversity, four-way receive diversity, and TMA	All these functions can be used to improve the network coverage in poor coverage areas, thus reducing call drops. It is recommended that these functions be used on the basis of the local network coverage.
Call drop rate on TCH	When Call Drop Rate on SDCCH is high, Call Drop Rate on TCH may decrease because call drops on SDCCH may be compromised for a low Call Drop Rate on TCH.

Copyright © 2008 Huawei Technologies Co., Ltd. All rights reserved.

Confidential Information of Huawei. No Spreading Without Permission

Content

- Paging Success Rate
- SDCCH Availability
- SDCCH Congestion Rate
- Immediate Assignment Success Rate
- SDCCH Call Drop Rate
- **TCH Availability**
- TCH Congestion Rate
- TCH Assignment Success Rate
- TCH Call Drop Rate
- Handover Success Rate
- Success Rate of Call Setup
- Call Setup Delay
- Call Complete Success Rate

Copyright © 2008 Huawei Technologies Co., Ltd. All rights reserved.

Confidential Information of Huawei. No Spreading Without Permission

TCH Availability

- Definition
  - TCH Availability indicates the ratio of the number of available TCHs to the number of configured TCHs in a measurement period. In the case of dynamic conversion between TCH and PDCH, the number of configured TCHs refers to the number of dynamically configured TCHs, that is, the actual number of TCHs after dynamic conversion.
  - TCH Availability =
    - Mean Number of Available Channels (TCHF)/Mean Number of Dynamically Configured Channels (TCH) x 100%

Copyright © 2008 Huawei Technologies Co., Ltd. All rights reserved. HUAWEI

TCH Availability is one of resource utilization KPIs. When TCH availability is low, available TCHs may be insufficient for voice services even if sufficient TCHs are dynamically configured. Thus, TCHs are heavily congested and the access success rate is decreased. In addition, user experience is adversely affected

Confidential Information of Huawei. No Spreading Without Permission

TCH Availability

- Measurement Point
  - The BSC measures the number of available TCHs/dynamically configured TCHs every five seconds. At the end of the measurement period, the average number of available TCHs/dynamically configured TCHs equals the accumulative value of each sampling point divided by the number of sampling times.
  - If the state of a TCH is Idle or Busy, the number of available TCHs is incremented by one. Two TCHHs on one timeslot are measured as two TCHs. One dynamic PDTCH is initially measured as one TCH.

Copyright © 2008 Huawei Technologies Co., Ltd. All rights reserved.

Confidential Information of Huawei. No Spreading Without Permission

TCH Availability

- Measurement Point
  - The number of configured TCHs indicates the number of channels that serve as TCHs after dynamic conversion. Two TCHHs on one timeslot are measured as two TCHs. One dynamic PDTCH is initially measured as one TCH. Configured TCHs contain the TCHs in various states, such as Idle, Busy, Shutdown, Block, and OOS.
  - Dynamic rate adjustment (from TCH to SDCCH, between TCHF and TCHH, dynamic PDTCH adjustment) does not affect TCH Availability because the system regards the channels in the rate adjustment state as available channels.

Copyright © 2008 Huawei Technologies Co., Ltd. All rights reserved.

Confidential Information of Huawei. No Spreading Without Permission

TCH Availability

- Restrictions on Sampling
  - Restrictions on methods
    - Channels should not be manually blocked before and after sampling.
    - The faults in devices should be rectified in time.
  - Restrictions on environment
    - Poor transmission quality, unstable transmission links, and broken RSLs should be avoided over the Abis interface.
    - Unavailability of terrestrial resources, device failures, and power disruption should be avoided.

Copyright © 2008 Huawei Technologies Co., Ltd. All rights reserved.

Confidential Information of Huawei. No Spreading Without Permission

Content

- Paging Success Rate
- SDCCH Availability
- SDCCH Congestion Rate
- Immediate Assignment Success Rate
- SDCCH Call Drop Rate
- TCH Availability
- **TCH Congestion Rate**
- TCH Assignment Success Rate
- TCH Call Drop Rate
- Handover Success Rate
- Success Rate of Call Setup
- Call Setup Delay
- Call Complete Success Rate

Copyright © 2008 Huawei Technologies Co., Ltd. All rights reserved.

Confidential Information of Huawei. No Spreading Without Permission

TCH Congestion Rate

- Congestion Ratio on TCH involves two KPIs: Congestion Ratio on TCH (All Channels Busy) and TCH Congestion Rate (Overflow).
- Congestion Ratio on TCH (All Channels Busy) indicates the ratio of the number of failed TCH seizures due to busy TCHs to the number of TCH seizure requests.
  - If Congestion Ratio on TCH (All Channels Busy) is high, the network quality is degraded and capacity expansion is required.
  - Congestion Ratio on TCH (All Channels Busy) = Failed TCH Seizures due to Busy TCH/TCH Seizure Requests

Copyright © 2008 Huawei Technologies Co., Ltd. All rights reserved.

Confidential Information of Huawei. No Spreading Without Permission

TCH Congestion Rate

- TCH Congestion Rate (Overflow) indicates the ratio of the number of failed assignments or handovers due to no available TCHs to the number of TCH seizure requests. TCH Congestion Rate (Overflow) reflects the actual congestion conditions of a network.
  - If TCH Congestion Rate (Overflow) is high, the network quality is degraded and some services cannot be processed. In this case, capacity expansion is required.

Copyright © 2008 Huawei Technologies Co., Ltd. All rights reserved.

Confidential Information of Huawei. No Spreading Without Permission

TCH Congestion Rate

- Differences between Congestion Ratio on TCH (All Channels Busy) and TCH Congestion Rate (Overflow)
  - Congestion Ratio on TCH (All Channels Busy) indicates the ratio of the number of failed TCH assignments to the number of TCH requests. After a TCH assignment fails, directed retry or queuing can be performed to achieve a successful assignment or handover.
  - TCH Congestion Rate (Overflow) indicates the ratio of the number of failed assignments and handovers after directed retry, queuing, and preemption to the number of TCH seizure requests.

Copyright © 2008 Huawei Technologies Co., Ltd. All rights reserved. HUAWEI

If all the conditions are the same, TCH Congestion Rate (Overflow) should be lower than Congestion Ratio on TCH (All Channels Busy).

Confidential Information of Huawei. No Spreading Without Permission

TCH Congestion Rate

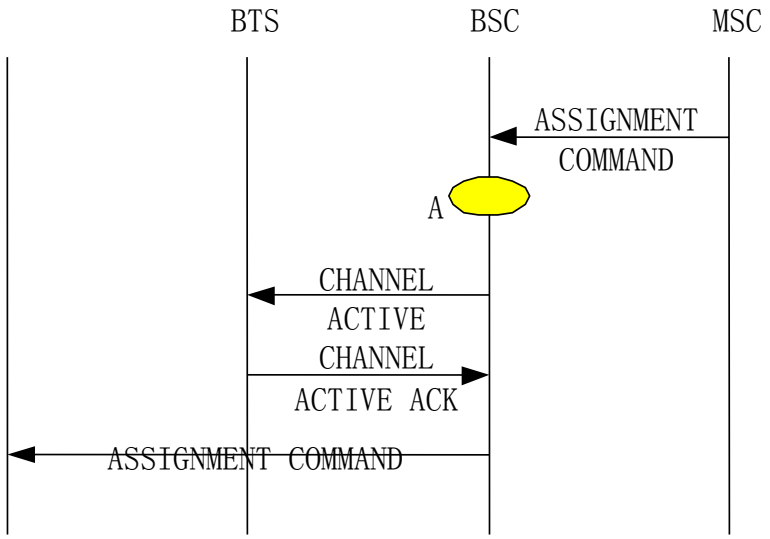

Copyright © 2008 Huawei Technologies Co., Ltd. All rights reserved. Page 62 HUAWEI

Measurement point of Congestion Ratio on TCH (All Channels Busy) in the assignment procedure:

Point A. In the TCH assignment procedure, if no TCH is available, the number of Failed TCH Seizures due to Busy TCH is incremented by one.

TCH Congestion Rate

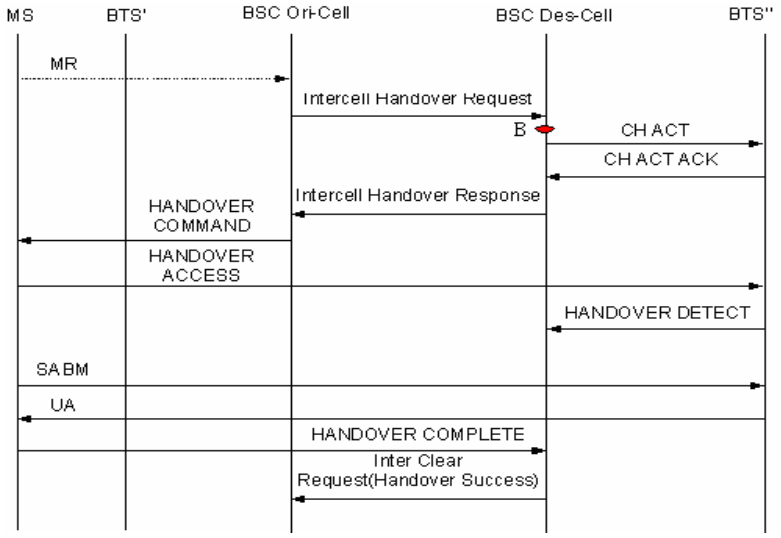

Copyright © 2008 Huawei Technologies Co., Ltd. All rights reserved. Page 63 HUAWEI

Measurement point of Congestion Ratio on TCH (All Channels Busy) in the intra-BSC handover procedure:

Point B. In the TCH assignment procedure, if no TCH is available, the number of Failed TCH Seizures due to Busy TCH is incremented by one, and the number of Failed Incoming Internal Inter-Cell Handovers (due to busy TCH) is incremented by one.

TCH Congestion Rate

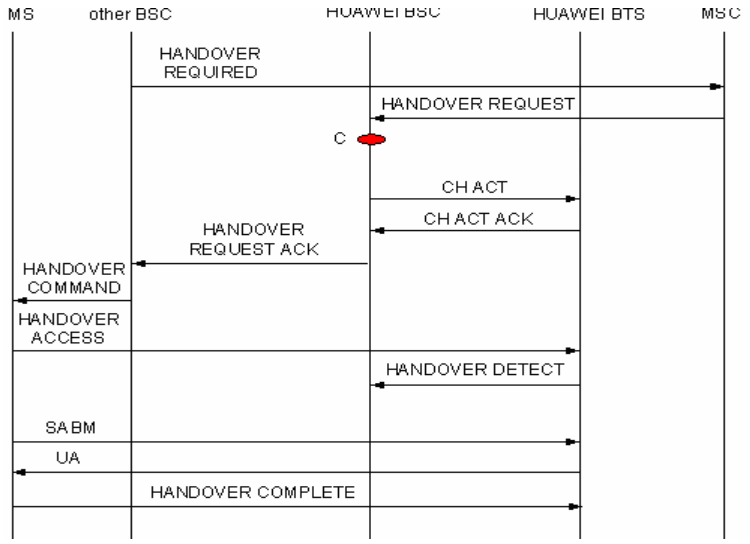

Copyright © 2008 Huawei Technologies Co., Ltd. All rights reserved. Page 64 HUAWEI

Measurement point of Congestion Ratio on TCH (All Channels Busy) in the inter-BSC handover procedure:

Point C. In the TCH assignment procedure, if no TCH is available, the number of Failed TCH Seizures due to Busy TCH is incremented by one, and the number of Failed Incoming External Inter-Cell Handovers (due to busy TCH) is incremented by one.

TCH Congestion Rate

- Measurement point of Failed Assignments (No Channel Available):
  - The measurement is triggered when the BSC does not support the assigned channel.
  - The BSC assigns a channel after receiving the ASSIGNMENT REQUEST message. If there is no channel available and the BSC does not support queuing or directed retry, the BSC measures the counter.
  - If Mode Modify is performed during the assignment procedure, the CHANNEL MODE MODIFY message is sent to the MS. The MS performs Mode Modify and sends the CHANNEL MODE MODIFY ACKNOWLEDGE message to the BSC. When receiving this message, the BSC measures the counter if the Um interface channel mode IE is abnormal.

Copyright © 2008 Huawei Technologies Co., Ltd. All rights reserved.

Confidential Information of Huawei. No Spreading Without Permission

TCH Congestion Rate

- Measurement point of Failed Assignments (No Channel Available):
  - After the BSC receives the ASSIGNMENT REQUEST message, if there is no channel available and the system supports queuing, a timer is set to wait for an idle channel. If an idle channel exists before the timer expires, the BSC successfully assigns the channel. If no idle channel exists when the timer expires and directed retry is not supported, the BSC measures the counter.

Copyright © 2008 Huawei Technologies Co., Ltd. All rights reserved.

Confidential Information of Huawei. No Spreading Without Permission

TCH Congestion Rate

- Measurement point of Failed Assignments (No Channel Available):
  - If the directed retry fails, the BSC measures the counter when any of the following situations occurs. In addition, the BSC sends the MSC an ASSIGNMENT FAILURE message to clear the connection.
    - The MR reported by the MS has no available target cell.
    - Directed retry to another cell in the BSC. The originating cell receives the Intercell Handover Reject message from the target cell. The measurement object is the originating cell.
    - Directed retry to another cell in the BSC. The handover fails and the MS reconnects to the original signaling channel. The measurement object is the originating cell.

Copyright © 2008 Huawei Technologies Co., Ltd. All rights reserved.

Confidential Information of Huawei. No Spreading Without Permission

TCH Congestion Rate

- Measurement point of Failed Assignments (No Channel Available):
  - If the directed retry fails, the BSC measures the counter when any of the following situations occurs. In addition, the BSC sends the MSC an ASSIGNMENT FAILURE message to clear the connection.
    - Directed retry to another cell in the BSC. The target cell response is not received within scheduled time. The measurement object is the originating cell.
    - Directed retry to another cell in the BSC. The originating cell receives the Inter Clear Request message from the target cell. This clear message is used to inform the originating cell of the directed retry failure and to request the originating cell to clear the connection. The measurement object is the originating cell.

Copyright © 2008 Huawei Technologies Co., Ltd. All rights reserved.

Confidential Information of Huawei. No Spreading Without Permission

TCH Congestion Rate

- Measurement point of Failed Assignments (No Channel Available):
  - If the directed retry fails, the BSC measures the counter when any of the following situations occurs. In addition, the BSC sends the MSC an ASSIGNMENT FAILURE message to clear the connection.
    - Directed retry to another cell in the BSC. The originating cell sends the MS a HANDOVER COMMAND message, requesting the MS to access a new channel. If the originating cell does not receive the Inter Clear Request from the target cell within scheduled time, the BSC measures the counter.

Copyright © 2008 Huawei Technologies Co., Ltd. All rights reserved.

Confidential Information of Huawei. No Spreading Without Permission

TCH Congestion Rate

- Environment Factors That Affect Congestion Ratio on TCH

Transmission	Poor transmission quality and unstable transmission links over the Abis interface
Device	A large number of unavailable terrestrial resources or faulty devices
Traffic volume	Imbalanced distribution of traffic volume in the network, or traffic volume that exceeds the planned capacity

Copyright © 2008 Huawei Technologies Co., Ltd. All rights reserved. HUAWEI

Congestion Ratio on TCH is one of traffic measurement KPIs. It can be obtained only through traffic measurement.

Confidential Information of Huawei. No Spreading Without Permission

TCH Congestion Rate

- Network Parameters That Affect Congestion Ratio on TCH

Cell reselection parameters	In the case of a high congestion rate in the network because of the high congestion rate in a certain cell, the number of MSs that camp on the cell can be adjusted by setting cell reselection parameters.
handover parameters	If handover parameters are improperly set, handovers occur frequently. Therefore, channel congestion occurs and Congestion Ratio on TCH increases.
Assignment Cell Load Judge Enable	When this parameter is set to **Yes**, the directed retry procedure is performed during the assignment procedure if the following conditions are met: the cell supports directed retry and the load of the cell is greater than or equal to **Cell Direct Try Forbidden Threshold**. By default, this parameter is set to **No**.

Copyright © 2008 Huawei Technologies Co., Ltd. All rights reserved.

Confidential Information of Huawei. No Spreading Without Permission

TCH Congestion Rate

- Network Parameters That Affect Congestion Ratio on TCH

Directed Retry Load Access Threshold	During directed retry, only the cells whose loads are smaller than or equal to **Directed Retry Load Access Threshold** are selected as candidate target cells. This parameter is used to adjust candidate target cells for directed retry. If the value of the parameter is too high, the cells with heavy loads are selected as candidate target cells so that the handover is meaningless. If the value of the parameter is too low, it is difficult to select candidate target cells. By default, the parameter is set to 5, which indicates the cell load level.
Cell Direct Try Forbidden Threshold	When **Assignment Cell Load Judge Enable** is set to **Yes**, the directed retry procedure is performed during the assignment procedure if the following conditions are met: The cell supports directed retry and the load of the cell is greater than or equal to **Cell Direct Try Forbidden Threshold**. By default, the parameter is set to 3, which indicates the cell load level.

Copyright © 2008 Huawei Technologies Co., Ltd. All rights reserved.

Confidential Information of Huawei. No Spreading Without Permission

TCH Congestion Rate

- Network Functions That Affect Congestion Ratio on TCH

Directed retry	When congestion occurs in a cell, directed retry procedure can be initiated to hand over the current call to another cell, thus decreasing TCH Congestion Rate (Overflow). For the BSC6000, thresholds can be set to automatically trigger the directed retry procedure. You can modify the settings of parameters to adjust the load in a cell. It is recommended that this function be enabled.
Half-Rate Channel	If traffic volume is high but capacity cannot be expanded, half-rate TCHs can be used to serve more MSs, thus decreasing Congestion Ratio on TCH.
SDCCH dynamic adjustment	This function is used to convert some TCHs into SDCCHs, thus relieving the congestion of SDCCHs. The number of available TCHs, however, decreases. Therefore, TCH congestion may occur. To ensure sufficient SDCCHs for normal running of other services, this function is enabled by default.

Copyright © 2008 Huawei Technologies Co., Ltd. All rights reserved.

Confidential Information of Huawei. No Spreading Without Permission

TCH Congestion Rate

- Other KPIs That related with Congestion Ratio on TCH

Congestion ratio on SDCCH	The SDCCH dynamic adjustment function can be used to reduce Congestion Ratio on SDCCH. The number of available TCHs, however, decreases. Therefore, Congestion Ratio on TCH increases.

Copyright © 2008 Huawei Technologies Co., Ltd. All rights reserved.

Confidential Information of Huawei. No Spreading Without Permission

Content

- Paging Success Rate
- SDCCH Availability
- SDCCH Congestion Rate
- Immediate Assignment Success Rate
- SDCCH Call Drop Rate
- TCH Availability
- TCH Congestion Rate
- **TCH Assignment Success Rate**
- TCH Call Drop Rate
- Handover Success Rate
- Success Rate of Call Setup
- Call Setup Delay
- Call Complete Success Rate

Copyright © 2008 Huawei Technologies Co., Ltd. All rights reserved.

Confidential Information of Huawei. No Spreading Without Permission

TCH Assignment Success Rate

- Definition
  - TCH Assignment Success Rate is one of accessibility KPIs. It indicates the ratio of successfully seizing TCHs and making calls. This KPI directly affects user experience.
  - TCH Assignment Success Rate is obtained through traffic measurement. The formula for calculating TCH Assignment Success Rate is as follows:
    - TCH Assignment Success Rate = Successful Assignments/Assignment Requests x 100%

Copyright © 2008 Huawei Technologies Co., Ltd. All rights reserved. Page 76 HUAWEI

TCH Assignment Success Rate refers to the successful seizure ratio of TCHs assigned by the BSC during the assignment procedure. The TCH assignment procedure refers to the process between the time the BSC receives the assignment request message from the MSC and the time the BSC receives the assignment complete message.

TCH Assignment Success Rate

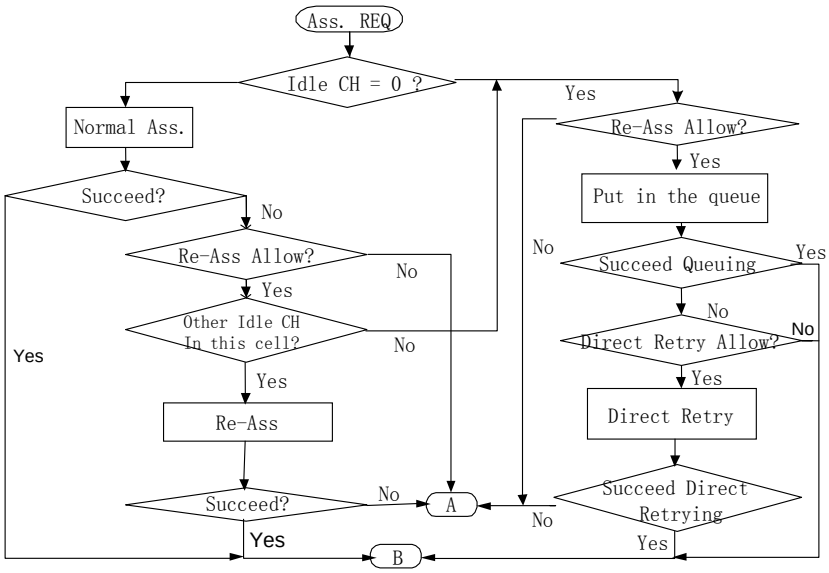

Copyright © 2008 Huawei Technologies Co., Ltd. All rights reserved. Page 77 HUAWEI

A: measurement point of TCH seizure fail (For call).

B: measurement point of TCH seizure succeed (For call).

TCH Assignment Success Rate

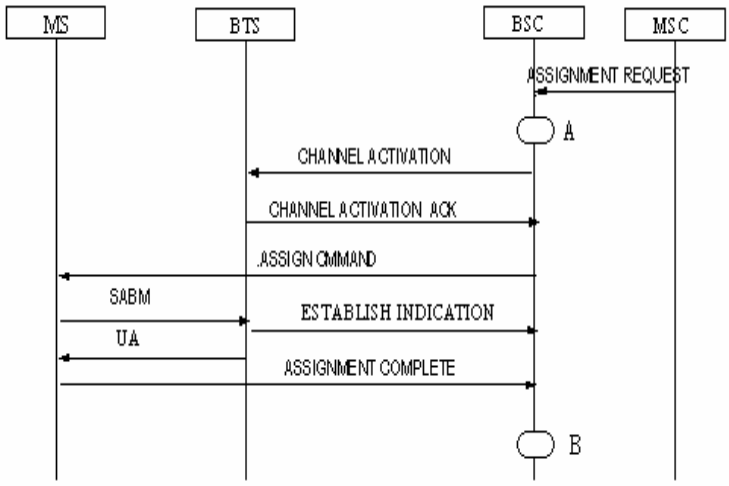

Copyright © 2008 Huawei Technologies Co., Ltd. All rights reserved. Page 78 HUAWEI

Measurement Point for Call

A——Assignment Request

B——Assignment Complete

TCH Assignment Success Rate

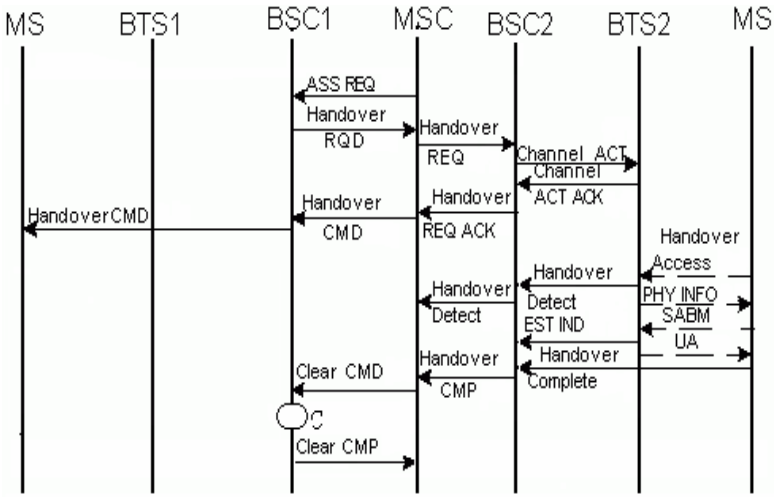

Copyright © 2008 Huawei Technologies Co., Ltd. All rights reserved. Page 79 HUAWEI

Measurement Point during Direct Retry between BSCs:

C ----- Success Direct Retry between BSCs

TCH Assignment Success Rate

- **KPI Test Method**
  - **TCH Assignment Success Rate is one of traffic measurement KPIs, which can be measured through registration or reporting of the related traffic measurement KPIs. Generally, this KPI is not measured through drive tests because of the limited samples and incomplete test routes.**

Copyright © 2008 Huawei Technologies Co., Ltd. All rights reserved. Page 80 HUAWEI

Network congestion inevitably leads to the decrease in the assignment success rate. Therefore, the assignment success rate during the network congestion period cannot be used to indicate actual network performance.

A sudden increase in traffic volume leads to serious network congestion. The assignment success rate during the burst traffic period cannot be used to indicate actual network performance.

TCH Assignment Success Rate

- Environment Factors That Affect Congestion Ratio on TCH

Coverage	Network optimization cannot solve such coverage problems as blind coverage area, low coverage level, or cross coverage.
Interference	Unavoidable interference can be the inter-network interference, interference from repeaters, or intra-network interference caused by aggressive frequency reuse.
Transmission	Poor transmission quality and unstable transmission links over the Abis interface and the A interface
Device	A large number of unavailable terrestrial resources or faulty devices
Antenna System	Failed assignments due to inconsistency in the directions of transmit and receive antennas
Traffic volume	Imbalanced distribution of traffic volume in the network leads to serious TCH congestion in some cells.

Copyright © 2008 Huawei Technologies Co., Ltd. All rights reserved.

Confidential Information of Huawei. No Spreading Without Permission

TCH Assignment Success Rate

- Network Parameters That Affect Congestion Ratio on TCH

CIC	The value must be consistent with that on the MSC side.
State of terrestrial links	The value must be consistent with that on the MSC side.
Queuing	This function should be enabled on the MSC side to improve TCH Assignment Success Rate.
Preemption	This function should be enabled on the MSC side to improve TCH Assignment Success Rate.
TCH re-assignment	It is recommended that this function be enabled to improve TCH Assignment Success Rate. By default, this function is enabled.

Copyright © 2008 Huawei Technologies Co., Ltd. All rights reserved.

Confidential Information of Huawei. No Spreading Without Permission

TCH Assignment Success Rate

- Network Parameters That Affect Congestion Ratio on TCH

Directed retry	It is recommended that this function be enabled to improve TCH Assignment Success Rate. By default, this function is enabled.
Half-Rate Service	This function can be used to expand the capacity of a cell. Therefore, the congestion of TCHs in the cell is relieved to some extent, and TCH Assignment Success Rate is increased.
AMR	This function can ensure voice quality when half-rate TCHs are used. Therefore, channel congestion in a cell can be relieved to some extent, and TCH Assignment Success Rate is increased.

Copyright © 2008 Huawei Technologies Co., Ltd. All rights reserved.

Confidential Information of Huawei. No Spreading Without Permission

TCH Assignment Success Rate

- Network Functions That Affect Congestion Ratio on TCH

Congestion ratio on TCH	The assignment success rate inevitably decreases if Congestion Ratio on TCH is high.
Success Rate of Immediate Assignments	If the SDCCH dynamic adjustment function is enabled in the cell where many immediate assignment requests exist, TCH congestion may occur and TCH Assignment Success Rate decreases.
Voice quality	Full-rate TCHs are assigned to ensure voice quality. In this case, TCH congestion may occur and TCH Assignment Success Rate decreases.

Copyright © 2008 Huawei Technologies Co., Ltd. All rights reserved.

Confidential Information of Huawei. No Spreading Without Permission

TCH Assignment Success Rate

- Network Functions That Affect Congestion Ratio on TCH

Handover success rate	If the directed retry function is enabled, the BSC measures the number of assignment requests and of handover requests when it measures the number of directed retry requests; the BSC measures the number of successful assignments and of successful handovers when it measures the number of successful directed retry attempts; the BSC measures the number of failed assignments and of failed handovers when it measures the number of failed directed retry attempts. Therefore, the handover success rate is affected if the directed retry function is enabled.
Call drop ratio on TCH	If the preemption function is enabled, the assignment success rate may increase, but the call drop ratio due to forced handover may increase.

Copyright © 2008 Huawei Technologies Co., Ltd. All rights reserved.

Confidential Information of Huawei. No Spreading Without Permission

TCH Assignment Success Rate

- Other KPIs That Affect Congestion Ratio on TCH

Failed Assignments (No Channel Available)	If the number of Failed Assignment (No Channel Available) is great, you can infer that many TCH assignments fail because of TCH congestion and that the assignment success rate decreases. Therefore, measures should be taken to solve the congestion problem.
Successful TCH Seizures/Successful Channel Activations	This ratio indicates the proportion of procedure failures because of various reasons on the Um interface.

Copyright © 2008 Huawei Technologies Co., Ltd. All rights reserved.

Confidential Information of Huawei. No Spreading Without Permission

Content

- Paging Success Rate
- SDCCH Availability
- SDCCH Congestion Rate
- Immediate Assignment Success Rate
- SDCCH Call Drop Rate
- TCH Availability
- TCH Congestion Rate
- TCH Assignment Success Rate
- **TCH Call Drop Rate**
- Handover Success Rate
- Success Rate of Call Setup
- Call Setup Delay
- Call Complete Success Rate

Copyright © 2008 Huawei Technologies Co., Ltd. All rights reserved.

Confidential Information of Huawei. No Spreading Without Permission

TCH Call Drop Rate

- Definition
  - Call Drop Ratio on TCH indicates the ratio of the number of call drops to the number of successful TCH seizures after the BSC successfully assigns TCHs to MSs.
  - Call Drop Ratio on TCH contains the following aspects: the probability of call drops after the establishment of TCHs and the probability of call drops during call establishment.
  - Call Drop Ratio on TCH is one of retainability KPIs. It reflects the probability of call drops due to various reasons after the MSs access the TCHs properly. If Call Drop Ratio on TCH is high, user experience is adversely affected.

Copyright © 2008 Huawei Technologies Co., Ltd. All rights reserved.

HUAWEI

Confidential Information of Huawei. No Spreading Without Permission

TCH Call Drop Rate

- Definition of Successful TCH Seizures
  - The measurement of this counter provides the number of TCHs successfully seized by MSs.
    - In the early assignment, assignment, and handover procedures, the BSC measures this counter after the MSs successfully seize the TCHs.
    - In the assignment procedure, if directed retry is performed successfully, the number of Successful TCH Seizures is incremented by one. In other words, after receiving the ASSIGNMENT REQUEST message from the MSC, the BSC initiates an outgoing inter-cell handover based on the neighbor cell information in the MR sent by the MS if no channel is available in the serving cell and if system supports directed retry.

Copyright © 2008 Huawei Technologies Co., Ltd. All rights reserved.

Confidential Information of Huawei. No Spreading Without Permission

TCH Call Drop Rate

- Definition of Call Drops on TCH
  - Call drops on TCH : This counter is measured when a TCH is exceptionally released due to any cause during a call.
    - In a handover procedure, this counter is incremented by one when the handover procedure fails because of any cause after the MS accesses the TCH assigned by the BSC.
    - This counter is incremented by one when a call drop occurs after the MS is in the stable communication state on the TCH.
    - When the preceding two cases occur, the BSC sends a CLEAR REQUEST message to the MSC to clear the call.

Copyright © 2008 Huawei Technologies Co., Ltd. All rights reserved.

Confidential Information of Huawei. No Spreading Without Permission

TCH Call Drop Rate

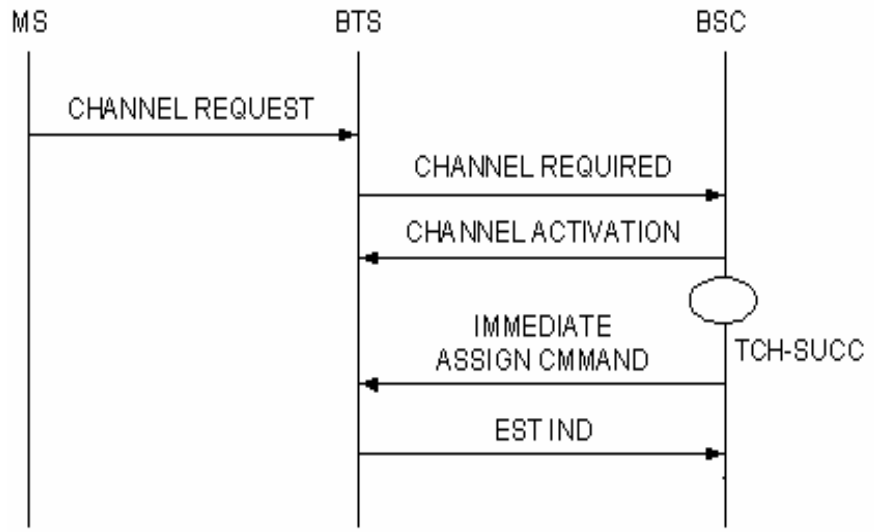

Copyright © 2008 Huawei Technologies Co., Ltd. All rights reserved. Page 91 HUAWEI

Measurement Point of Successful TCH Seizures

In the very early TCH assignment procedure, this counter is incremented by one when the BSC receives a CHANNEL ACTIVATION ACKNOWLEDGE message from the BTS.

TCH Call Drop Rate

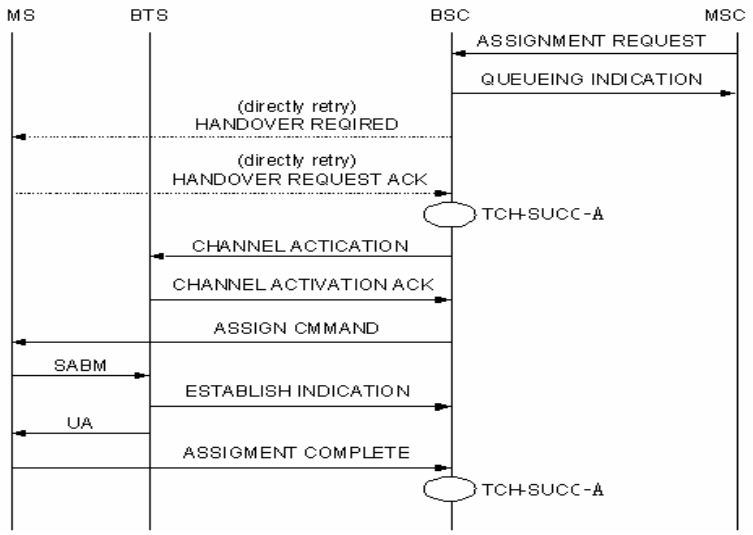

Copyright © 2008 Huawei Technologies Co., Ltd. All rights reserved. Page 92 HUAWEI

Measurement Point of Successful TCH Seizures

After the assignment procedure is complete successfully, this counter is incremented by one when the BSC sends an ASSIGNMENT COMPLETE message to the MSC.

TCH Call Drop Rate

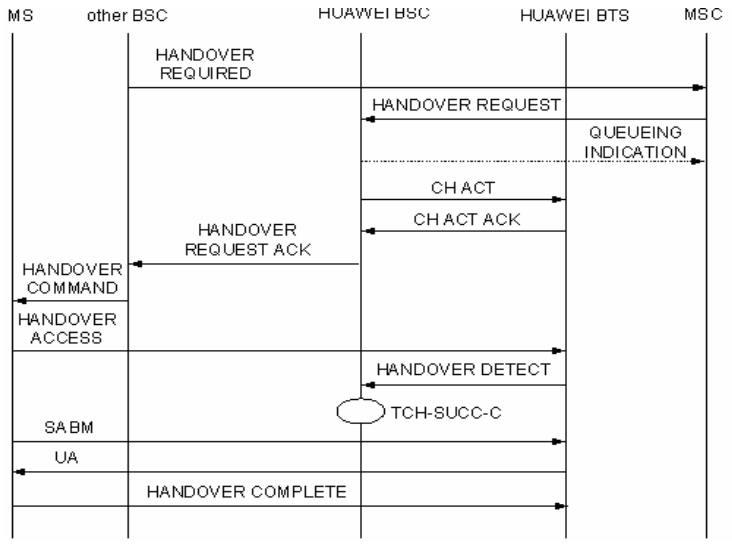

Copyright © 2008 Huawei Technologies Co., Ltd. All rights reserved. Page 93 HUAWEI

Measurement Point of Successful TCH Seizures

In the incoming BSC handover procedure, this counter is incremented by one when the BSC that controls the target cell receives a HANDOVER DETECTION message from the BTS.

TCH Call Drop Rate

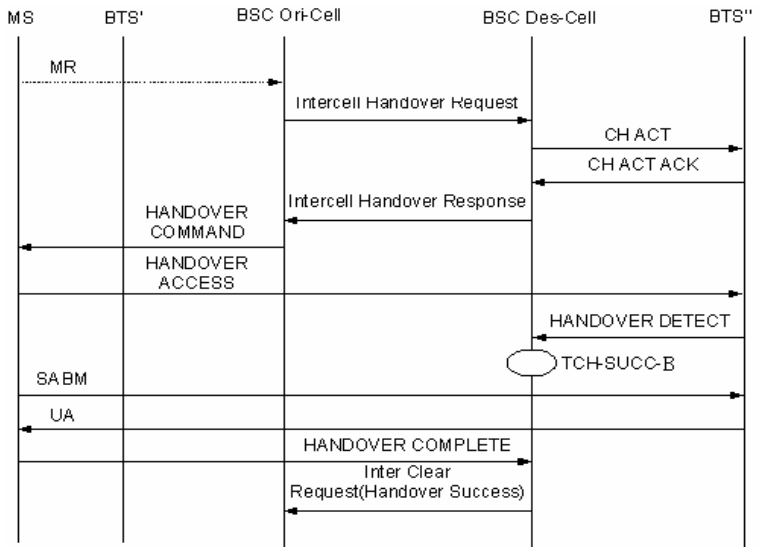

Copyright © 2008 Huawei Technologies Co., Ltd. All rights reserved. Page 94 HUAWEI

Measurement Point of Successful TCH Seizures

In the incoming internal inter-cell/intra-cell handover procedure, this counter is incremented by one when the BSC receives a HANDOVER DETECTION message from the BTS.

TCH Call Drop Rate

- Measurement Point of Successful TCH Seizures
  - If the target cell involved in the Directed Retry procedure is under another BSC and if the Directed Retry procedure is performed successfully, the MSC sends a CLEAR COMMAND message to the originating BSC to clear the original connection. This counter is incremented by one when the originating BSC receives the CLEAR COMMAND message.
  - If the directed retry with the target cell under the local BSC is successful, the target cell sends a message to the originating cell to indicate that the resource and the connection need to be cleared. This counter is incremented by one when the originating cell receives the message.

Copyright © 2008 Huawei Technologies Co., Ltd. All rights reserved.

Confidential Information of Huawei. No Spreading Without Permission

TCH Call Drop Rate

- Measurement Point of Call Drops on TCH during call

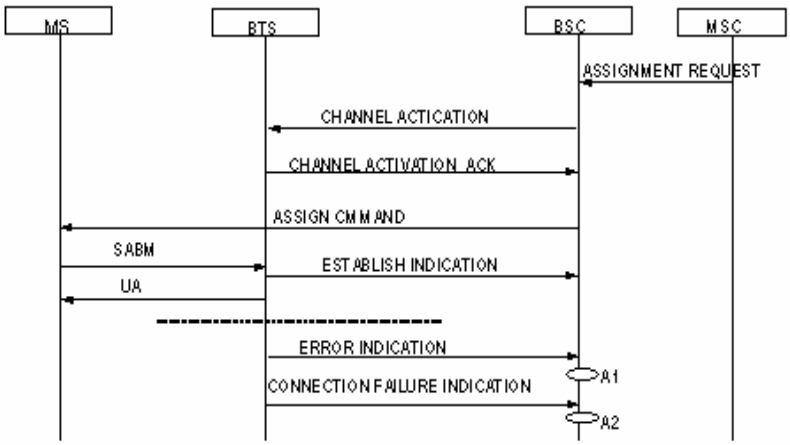

Copyright © 2008 Huawei Technologies Co., Ltd. All rights reserved. Page 96 HUAWEI

When a TCH is seized to carry traffic, the BTS sends an ERROR INDICATION message to the BSC to indicate that an active connection on the TCH radio link is broken. After receiving the ERROR INDICATION message, the BSC starts the timer TREESTABLISH. This counter is incremented by one when the timer expires.

When a TCH is seized to carry traffic, the BTS sends a CONNECTION FAILURE INDICATION message to the BSC because of the radio link failure on the SDCCH or hardware failure. For details, refer to the GSM 0858. After receiving the ERROR INDICATION message, the BSC starts the timer TREESTABLISH. This counter is incremented by one when the timer expires.

TCH Call Drop Rate

- Measurement Point of Call Drops on TCH during Inter-BSC handover

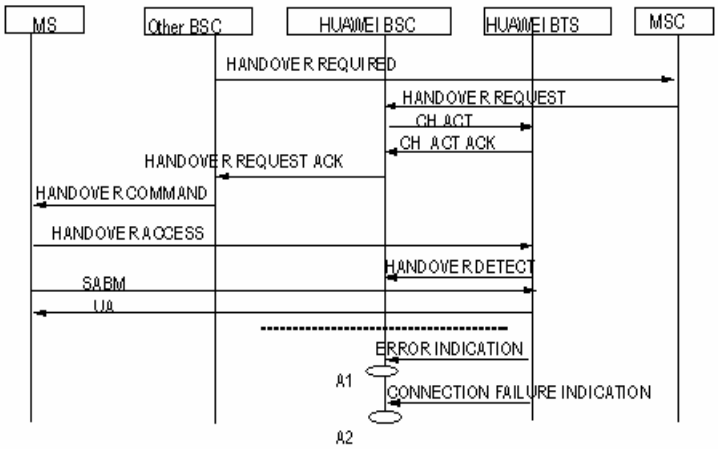

Copyright © 2008 Huawei Technologies Co., Ltd. All rights reserved. Page 97 HUAWEI

When the TCH is used to carry traffic in the incoming BSC handover procedure, this counter is incremented by one when the timer expires before the target cell receives the HANDOVER COMPLETE message.

When the TCH is used to carry traffic in the outgoing BSC handover procedure, this counter is incremented by one when the T8 timer expires before the originating cell receives the CLEAR HANDOVER message from the MSC.

TCH Call Drop Rate

- Measurement Point of Call Drops on TCH during intra-BSC handover

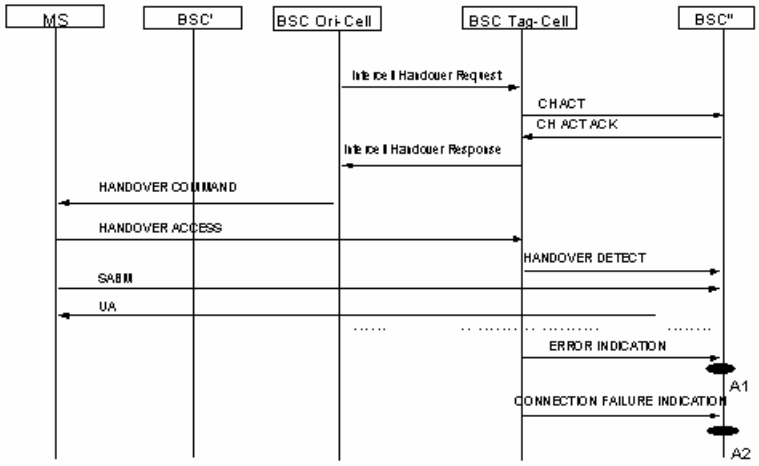

Copyright © 2008 Huawei Technologies Co., Ltd. All rights reserved. Page 98 HUAWEI

When the TCH is used to carry traffic in the intra-BSC handover procedure, the target cell sends an Inter Clear message to the originating cell to inform it of the handover failure if the timer expires before the target cell receives the HANDOVER COMPLETE message. This counter is incremented by one in the originating cell when the Inter Clear message is received.

When the TCH is used to carry traffic in the intra-BSC handover procedure, this counter is incremented by one if the timer expires before the originating cell that is not involved in the Directed Retry procedure receives the Inter Clear Request message with the cause value of HANDOVER COMPLETE from the target cell

TCH Call Drop Rate

- Other Measurement Point of Call Drops on TCH
  - When the TCH is used to carry traffic and if the BSC and the MSC support preemption, the radio resource used by an MS with lower priority may be preempted by an MS with higher priority, leading to the call drop of the MS with lower priority.
  - When the TCH is used to carry traffic, this counter is incremented by one when the RSL of the TRX that carries the TCH is broken.

Copyright © 2008 Huawei Technologies Co., Ltd. All rights reserved.

Confidential Information of Huawei. No Spreading Without Permission

TCH Call Drop Rate

- Sampling Methods
  - Call Drop Ratio on TCH is one of traffic measurement KPIs, which can be obtained through related traffic measurement tasks.
  - It can also be measured through sampling in drive tests. The result has a significant difference from the real value because of the limited samples and incomplete test routes; therefore, the result can serve as only a reference.
  - In actual measurement, register the specific counters and use an appropriate formula to calculate the value of the counter.
  - Trace the A interface messages in a measurement period, and calculate the number of CLEAR REQ messages. The number of CLEAR REQ messages reflects the number of call drops to a certain extent.

Copyright © 2008 Huawei Technologies Co., Ltd. All rights reserved.

Confidential Information of Huawei. No Spreading Without Permission

TCH Call Drop Rate

- Environment Factors that affect TCH Call Drop Rate

Coverage	Blind coverage area, low coverage level, or cross coverage, which cannot be solved through network optimization
Interference	Unavoidable inter-network interference, interference from repeaters, or high and unavoidable intra-network interference caused by the aggressive frequency reuse
Transmission	Poor transmission quality and unstable transmission links over the Abis interface and the A interface
Device	A large number of unavailable terrestrial resources or faulty devices
Antenna system	Call drops are likely to occur if the coverage is poor because the pitch angles of two uni-polarization antennas are different or because the feeder is faulty. The fault of the feeder may cause a high voltage standing wave ratio (VSWR), thus indirectly decreasing the transmit power and receive sensitivity.
Traffic volume	Imbalanced distribution of traffic volume in the network

Copyright © 2008 Huawei Technologies Co., Ltd. All rights reserved.

Confidential Information of Huawei. No Spreading Without Permission

TCH Call Drop Rate

- Network Parameters that affect TCH Call Drop Rate

Radio link timeout	If this timer is set to a lower value, a call drop is likely to occur when the receive level of the MS attenuates greatly because of the terrain. If this parameter is set to a higher value, the network releases the related resources only after the timer expires though the speech quality is unsatisfactory. Therefore, the utilization of resources is decreased. It is recommended that you set the parameter to a higher value in the rural areas with low traffic volume and to a lower value in the areas with high traffic volume.
SACCH multi-frames	Similar to **Radio Link Timeout**, this parameter is used for the uplink.
RXLEV_ACCESS_MIN, RACH Min.Access Level, and RACH Busy Threshold	These parameters relate to the network coverage, and the balance between the uplink and the downlink. If these parameters are set to small values, MSs in the areas of poor coverage can access the network and call drops are likely to occur. If the settings of these parameters cause the imbalance between the uplink and the downlink, call drops are likely to occur.

Copyright © 2008 Huawei Technologies Co., Ltd. All rights reserved.

Confidential Information of Huawei. No Spreading Without Permission

TCH Call Drop Rate

- Network Parameters that affect TCH Call Drop Rate

T305, T308	The two timers are set on the MSC side. When the MSC sends a DISCONNECT message to the BSC, the T305 timer starts to wait for the response from the BSC. When the MSC sends a RELEASE message to the BSC, the T308 timer starts to wait for the response from the BSC. If the MSC receives a CLEAR REQUEST message from the BSC before the two timers T305 and T308 expire, a call drop occurs; if the T305 and T308 timers are set to smaller values, the MSC sends a CLEAR COMMAND message to the BSC for disconnecting the link before receiving a CLEAR REQUEST message from the BSC, the call is normally released. Therefore, the number of call drops in traffic measurement decreases. If you cannot view the data of the MSC side, you can search the call drop signaling flow for the Disconnection, Release, Release, Clear Command messages that are consecutively sent from the MSC to the BSC. The cause value of the Disconnect and Release messages must be Recovery on Timer Expiry. Then, you can calculate the values of the T305 and the T308 timers based on the recorded time difference.
BA2 table	If neighbor cell relations are incomplete, some handovers cannot be performed and thus call drops occur. Therefore, complete neighbor cell relations must be defined.

Copyright © 2008 Huawei Technologies Co., Ltd. All rights reserved.

Confidential Information of Huawei. No Spreading Without Permission

TCH Call Drop Rate

- Network Functions that affect TCH Call Drop Rate

Power control and DTX	These functions can suppress the interference in the entire network and reduce the number of call drops due to interference. It is recommended that these functions be enabled.
Frequency hopping	When the frequency resources are insufficient, frequency hopping can average the interference to reduce the number of call drops due to interference. Therefore, in the case of insufficient frequency resources, it is recommended that frequency hopping be enabled.
PBT, transmit diversity, four-way receive diversity, and TMA	All these functions can be used to improve the network coverage in the areas with poor coverage, thus reducing call drops. It is recommended that these functions be used on the basis of the local network coverage.

Copyright © 2008 Huawei Technologies Co., Ltd. All rights reserved.

Confidential Information of Huawei. No Spreading Without Permission

TCH Call Drop Rate

- Network Functions that affect TCH Call Drop Rate

Concentric cell	In concentric cells, the coverage of the underlaid subcell is different from that of the overlaid subcell; therefore, call drops are likely to occur. It is recommended that appropriate cell parameters be set to reduce call drops in concentric cells.
Power boost before handover	This function can be used to significantly reduce call drops in the areas with high traffic volume; however, this function does not take much effect in the areas with low traffic volume. Interference may be caused when this function is enabled. This function is recommended in the areas with high traffic volume.

Copyright © 2008 Huawei Technologies Co., Ltd. All rights reserved.

Confidential Information of Huawei. No Spreading Without Permission

TCH Call Drop Rate

- Other KPIs that affect TCH Call Drop Rate

Paging Success Rate	To increase the paging success rate, you can decrease the values of the coverage-related parameters, such as RACH minimum access threshold, for the MS in the areas with poor coverage to respond to the paging. However, the call drop ratio in the areas with poor coverage may increase, thus increasing the call drop ratio on TCH. In contrast, if you modify the values of the coverage-related parameters to reduce the call drops on TCH, the MSs in the areas with poor coverage are not likely to access the network or respond to the paging, thus decreasing the success rate of paging.

Copyright © 2008 Huawei Technologies Co., Ltd. All rights reserved.

Confidential Information of Huawei. No Spreading Without Permission

Content

- Paging Success Rate
- SDCCH Availability
- SDCCH Congestion Rate
- Immediate Assignment Success Rate
- SDCCH Call Drop Rate
- TCH Availability
- TCH Congestion Rate
- TCH Assignment Success Rate
- TCH Call Drop Rate
- **Handover Success Rate**
- Success Rate of Call Setup
- Call Setup Delay
- Call Complete Success Rate

Copyright © 2008 Huawei Technologies Co., Ltd. All rights reserved.

Confidential Information of Huawei. No Spreading Without Permission

Handover Success Rate

- Definition
  - The purpose of handover is to ensure the call continuity, improve the speech quality, and reduce the cross interference in the network, thus providing better services for the subscribers.
  - Success ratio of handover is the ratio of the total number of successful handovers to the total number of handover requests.
  - This counter directly affects the user experience and is one of the most significant KPIs for the telecom operator.

Copyright © 2008 Huawei Technologies Co., Ltd. All rights reserved.

Confidential Information of Huawei. No Spreading Without Permission

Handover Success Rate

- Classification
  - The success rate of handover is an important remotion retainability KPI . In terms of procedure, it can be classified into success rate of handover and success rate of radio handover; in terms of NEs involved, it can be classified into success rate of intra-BSC handover, success rate of incoming BSC handover, and success rate of outgoing BSC handover.
    - Success Rate of Handover = Successful Handovers/Handover Requests
    - Success Rate of Radio Handover = Successful Handovers/Handover Requests

Copyright © 2008 Huawei Technologies Co., Ltd. All rights reserved.

Confidential Information of Huawei. No Spreading Without Permission

Handover Success Rate

- Measurement Point of Handover Success Rate in intra-BSC handover

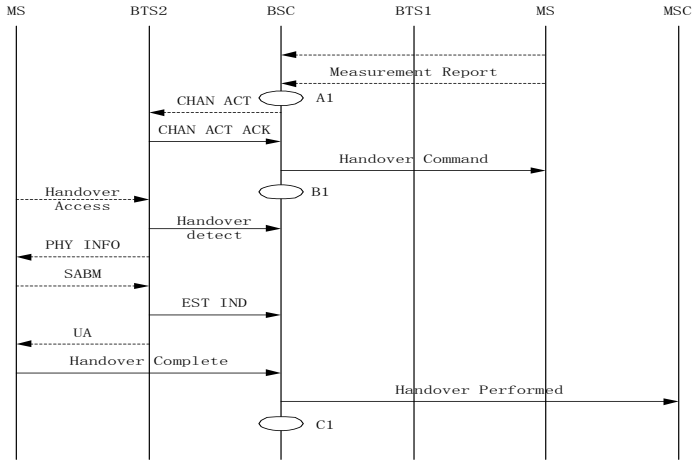

Copyright © 2008 Huawei Technologies Co., Ltd. All rights reserved.

A1——Measurement point of Incoming Internal Inter-Cell Handover Requests and Internal Intra-Cell Handover Requests

B1——Measurement point of Incoming Internal Inter-Cell Handover Responses (Incoming Internal Inter-Cell Handovers) and Internal Intra-Cell Handover Commands

C1——Measurement point of Successful Incoming Internal Inter-Cell Handovers and Successful Internal Intra-Cell Handovers

Confidential Information of Huawei. No Spreading Without Permission

Handover Success Rate

- Measurement Point of Handover Success Rate in intra-BSC handover

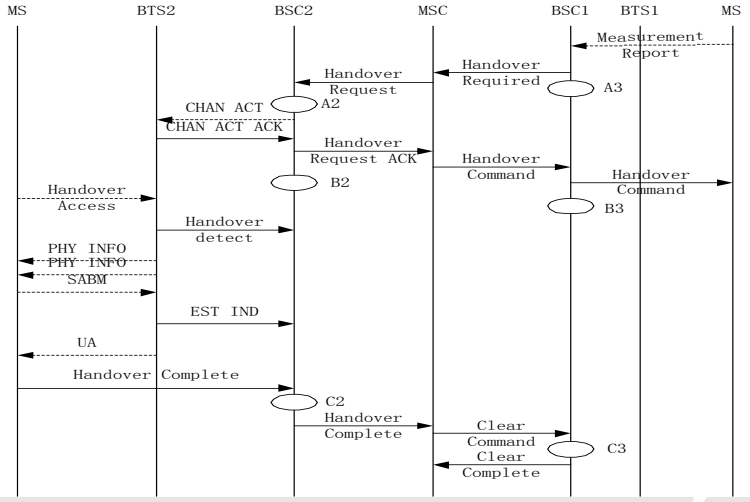

Copyright © 2008 Huawei Technologies Co., Ltd. All rights reserved. Page 111 HUAWEI

A2——Measurement point of incoming inter-BSC handover requests

B2——Measurement point of incoming inter-BSC handovers

C2——Measurement point of successful incoming inter-BSC handovers

A3——Measurement point of outgoing inter-BSC handover requests

B3——Measurement point of outgoing inter-BSC handovers

C3——Measurement point of successful outgoing inter-BSC handovers

Handover Success Rate

- Success Rate of Handover: (C1<Successful Incoming Internal Inter-Cell Handovers> +C3)/(A1<Incoming Internal Inter-Cell Handover Requests> +A3)
- Success Rate of Radio Handover: (C1 <Successful Incoming Internal Inter-Cell Handovers> +C3)/(B1<Number of Incoming Internal Inter-Cell Handover Responses> +B3)
- Success Rate of Intra-BSC Handover: C1/A1
- Internal Radio Handover Success Ratio per cell: C1/B1
- Success Rate of Incoming BSC Handover: C2/A2
- Success Rate of Incoming BSC Radio Handover: C2/B2
- Success Rate of Outgoing BSC Handover: C3/A3
- Success Rate of Outgoing BSC Radio Handover: C3/B3

Copyright © 2008 Huawei Technologies Co., Ltd. All rights reserved.

Confidential Information of Huawei. No Spreading Without Permission

Handover Success Rate

- Sampling Methods
  - Success Rate of Handover is a traffic measurement counter, which can be measured through registration of the related traffic measurement task or report of the measurement result.
  - It can also be measured through sampling in drive tests.
  - The result has a significant difference from the real value because of the limited samples and incomplete test routes; therefore, the result can serve as only a reference.

Copyright © 2008 Huawei Technologies Co., Ltd. All rights reserved.

Confidential Information of Huawei. No Spreading Without Permission

Handover Success Rate

- Environment Factors that affect handover success rate

Coverage	Blind coverage area, low coverage level, or cross coverage
Interference	Unavoidable interference can be the inter-network interference, interference from repeaters, or intra-network interference resulting from aggressive frequency reuse.
Transmission	Poor transmission quality and unstable transmission links over the Abis interface
Device	A large number of unavailable terrestrial resources, faulty devices, or asynchronous clocks
Traffic volume	Imbalanced distribution of traffic volume in the network. If the network is congested badly, the handover failures increase because of no available TCHs and the handover success rate deceases. The network congestion does not affect the success rate of radio handover.

Copyright © 2008 Huawei Technologies Co., Ltd. All rights reserved.

Confidential Information of Huawei. No Spreading Without Permission

Handover Success Rate

- Network Parameters that affect handover success rate

BA2 table	The neighbor cell relations must be configured completely. The missing configuration of neighbor cells decreases the success rate of handover.
3G BA2 table	If the handover may be performed from a 2G system to a 3G system, the missing configuration of 3G adjacent cells decreases the success rate of handover.
T8	This timer starts when the originating BSC receives a HO_CMD message from the MSC and stops when the originating BSC receives a CLEAR_CMD message from the MSC or a EST_IND message from the originating BTS. If the timer expires, the originating BSC sends a CLEAR REQUEST message to the MSC. If this timer is set to a lower value, the timer expires before the originating BSC receives a Clear Command message in the outgoing BSC handover procedure; thus the handover fails and the success rate of handover decreases. The default value is 25s.
T3103	In the intra-BSC handover procedure, this timer is set to wait for a Handover Complete message after a HO_CMD message is sent. If the timer expires, the handover fails.

Copyright © 2008 Huawei Technologies Co., Ltd. All rights reserved.

Confidential Information of Huawei. No Spreading Without Permission

Handover Success Rate

- Network Functions that affect handover success rate

Power boost before handover	This function can be used to significantly increase the success rate of handover in the areas with high traffic volume; however, this function does not take much effect in the areas with low traffic volume.
Multiple frequency bands	When the network supports multiple frequency bands, the success rate of handover decreases if some MSs do not support all the frequency bands.
Concentric cell	In the handover from the underlaid subcell to the overlaid subcell, the receive level in the overlaid subcell is not clear, a blink handover is likely to occur, thus decreasing the success rate of handover.

Copyright © 2008 Huawei Technologies Co., Ltd. All rights reserved.

Confidential Information of Huawei. No Spreading Without Permission

Handover Success Rate

- Other KPIs that affect handover success rate

Congestion Ratio on TCH	If the timer related to handover is set to a higher value, the TCHs may be congested. A high congestion rate of TCHs in a cell decreases the success rate of inter-cell handover but not the success rate of radio handover.
MOS	You can manually increase the number of handovers to increase the success rate of handover; however, the increase in the number of handovers decreases the MOS.

Copyright © 2008 Huawei Technologies Co., Ltd. All rights reserved.

Confidential Information of Huawei. No Spreading Without Permission

Content

- Paging Success Rate
- SDCCH Availability
- SDCCH Congestion Rate
- Immediate Assignment Success Rate
- SDCCH Call Drop Rate
- TCH Availability
- TCH Congestion Rate
- TCH Assignment Success Rate
- TCH Call Drop Rate
- Handover Success Rate
- **Success Rate of Call Setup**
- Call Setup Delay
- Call Complete Success Rate

Copyright © 2008 Huawei Technologies Co., Ltd. All rights reserved.

HUAWEI

Confidential Information of Huawei. No Spreading Without Permission

Success Rate of Call Setup

- Definition
  - It can be abbreviated as CSSR, which reflects the probability of successful calls initiated by the MS.
  - The CSSR is a key counter in evaluating the network performance. If the value of this counter is low, the MS is not likely to successfully initiate a call, thus severely affecting the user experience.
  - The value of this counter is obtained through traffic measurement.
    - CSSR = Successful Assignments/Call-related Requests x 100%
    - BSS CSSR = Success Rate of Immediate Assignment x Success Rate of Assignment x (1 - Call Drop Ratio on SDCCH)

Copyright © 2008 Huawei Technologies Co., Ltd. All rights reserved. Page 119 HUAWEI

The CSSR includes the very early TCH assignment but excludes the SDCCH seizure initiated on the MSC side due to any cause; the BSS CSSR takes the immediate assignment into account.

Generally, the BSS CSSR is used.

Success Rate of Call Setup

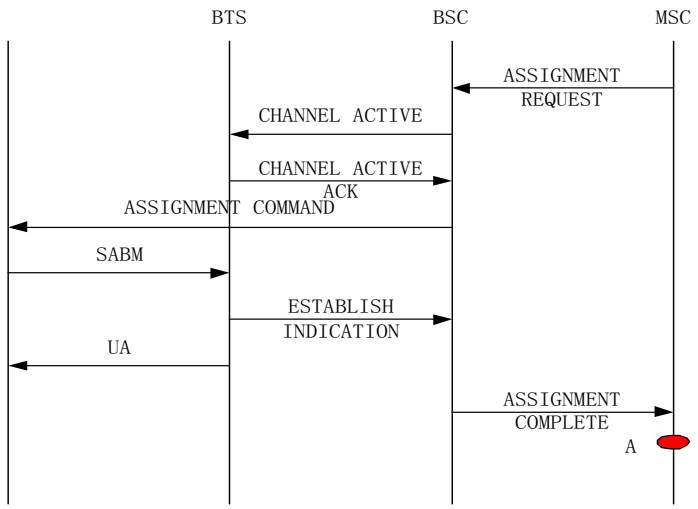

Copyright © 2008 Huawei Technologies Co., Ltd. All rights reserved.

Measurement Point of CSSR: Assignment Completed (For Call)

Confidential Information of Huawei. No Spreading Without Permission

Success Rate of Call Setup

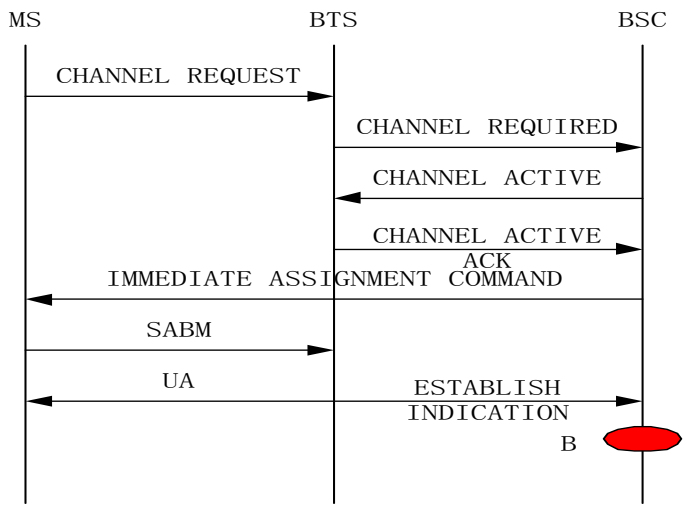

Copyright © 2008 Huawei Technologies Co., Ltd. All rights reserved. HUAWEI

Measurement Point of CSSR: Immediate Assignment Completed (For Call)

Confidential Information of Huawei. No Spreading Without Permission

Success Rate of Call Setup

- Measurement Point of BSS CSSR
  - For the measurement point of this counter, refer to those of the closely related counters: Success Rate of Immediate Assignment, Call Drop Ratio on SDCCH, and Success Rate of Assignment.

Copyright © 2008 Huawei Technologies Co., Ltd. All rights reserved.

Confidential Information of Huawei. No Spreading Without Permission

Success Rate of Call Setup

- Network Parameters that affect Success Rate of Call Setup

RACH Min.Access Level	This parameter affects the coverage area. If this parameter is set to a higher value, the actual coverage area of the network becomes small; if this parameter is set to a lower value, call drops are likely to occur because of invalid access or too weak access signals, thus decreasing the success rate of BSS call setup.
RACH Busy Threshold	This parameter affects the coverage area. If this parameter is set to a higher value, the actual coverage area of the network becomes small; if this parameter is set to a lower value, call drops are likely to occur because of invalid access or too weak access signals, thus decreasing the success rate of BSS call setup.
Random Access Error Threshold	This parameter affects the coverage area. If this parameter is set to a higher value, the actual coverage area of the network becomes small; if this parameter is set to a lower value, call drops are likely to occur because of invalid access or too weak access signals, thus decreasing the success rate of BSS call setup.
CIC No.	The value of this parameter must be consistent with that on the MSC.

Copyright © 2008 Huawei Technologies Co., Ltd. All rights reserved.

Confidential Information of Huawei. No Spreading Without Permission

Success Rate of Call Setup

- Network Functions that affect Success Rate of Call Setup

Directed retry	When TCHs in a cell are insufficient, TCHs in other cells can be assigned through directed retry, thus increasing the CSSR and BSS CSSR. By default, this function is enabled.
SDCCH dynamic adjustment	When SDCCHs are insufficient, this function can be enabled to convert some TCHs into SDCCHs to increase the success rate of immediate assignment, thus increasing the BSS CSSR. By default, this function is enabled.
TCH re-assignment	When this function is enabled, the BSC initiates a re-assignment procedure after receiving the failure indication of the TCH assignment on the Um interface. This function can be used to increase the success rate of TCH assignment, thus increasing the CSSR and the BSS CSSR. By default, this function is enabled.
Flex Abis	This function is implemented in the BSC6000V900R003 and later versions. This function enables dynamic assignment of Abis timeslots to more efficiently utilize the Abis link resources; however, assignment may fail because of congestion on the Abis links. This function may decrease the CSSR and the BSS CSSR.

Copyright © 2008 Huawei Technologies Co., Ltd. All rights reserved.

Confidential Information of Huawei. No Spreading Without Permission

Content

- Paging Success Rate
- SDCCH Availability
- SDCCH Congestion Rate
- Immediate Assignment Success Rate
- SDCCH Call Drop Rate
- TCH Availability
- TCH Congestion Rate
- TCH Assignment Success Rate
- TCH Call Drop Rate
- Handover Success Rate
- Success Rate of Call Setup
- **Call Setup Delay**
- Call Complete Success Rate

Copyright © 2008 Huawei Technologies Co., Ltd. All rights reserved.

Confidential Information of Huawei. No Spreading Without Permission

Call Setup Delay

- Definition
  - Call Setup Delay is the average interval between the initiation of a call and the setup of the call.
  - A high value of this counter severely affects user experience.
  - This counter is measured in drive tests. The value of this counter is the time required in setting up an end-to-end call by the MS in the radio network.
  - Call Setup Delay is the average setup time of multiple successful calls. You need to conduct multiple dialing tests.

Copyright © 2008 Huawei Technologies Co., Ltd. All rights reserved.

Confidential Information of Huawei. No Spreading Without Permission

Call Setup Delay

- Classification
  - Call Setup Delay is measured in the following cases:
  - MS to PSTN: Average interval between the transmission of the CHANNEL REQUEST message from the MS and the reception of the ALERTING message sent from the MSC.
  - MS to MS: Average interval between the transmission of the CHANNEL REQUEST message from the calling MS and the reception of the ALERTING message sent from the MSC.
  - PSTN to MS: Average interval between the transmission of the PAGING message from the MSC and the transmission of the ALERTING message sent from the MS to the MSC.

Copyright © 2008 Huawei Technologies Co., Ltd. All rights reserved.

Confidential Information of Huawei. No Spreading Without Permission

Call Setup Delay

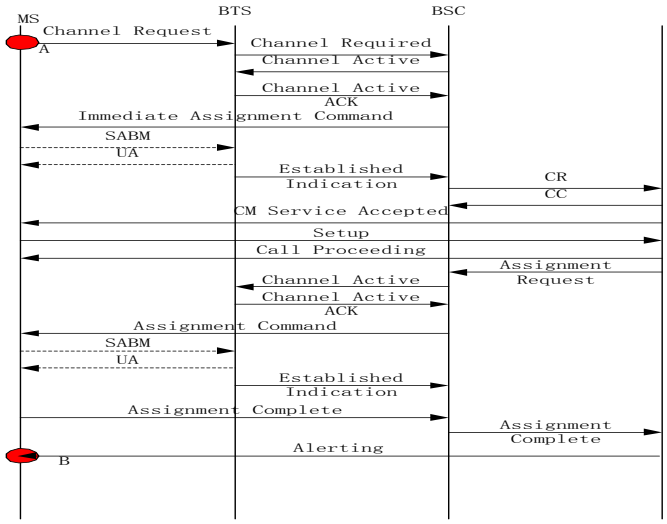

Copyright © 2008 Huawei Technologies Co., Ltd. All rights reserved. Page 128 HUAWEI

Measurement Point in the procedure of originating call establishment (early assignment)

B-A:

MS to MS Call Setup Delay

MS to PSTN Call Setup Delay

Call Setup Delay

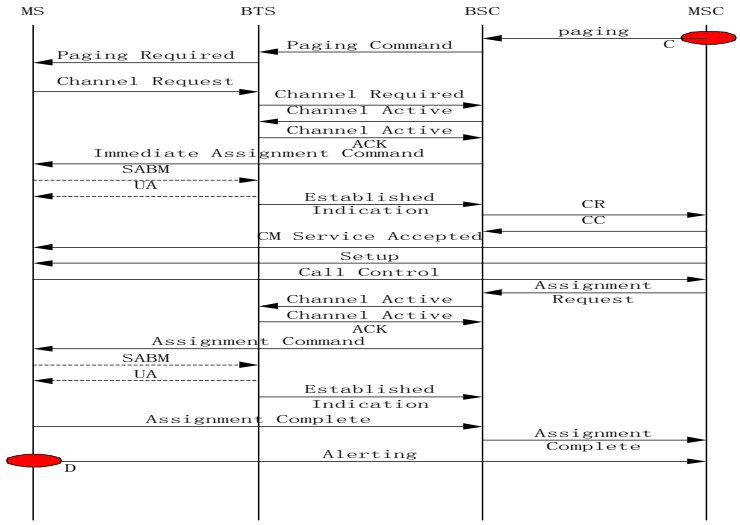

Copyright © 2008 Huawei Technologies Co., Ltd. All rights reserved. Page 129 HUAWEI

Measurement Point in the procedure of destination call establishment (early assignment)

D-C:

PSTN to MS Call Setup Delay

Call Setup Delay

- Estimated delay between signaling

signaling	delay（ms）
Uplink CHAN RQD->downlink CHAN ACT	14.9
Downlink CHAN ACT->uplink CHAN ACT ACK	9.6
Uplink CHAN ACT ACK->downlink IMM ASS CMD	14.5
Downlink IMM ASS CMD->uplink EST IND（CM Service REQ）	230.5
Uplink EST IND->downlink AUTH REQ	104
Downlink AUTH REQ->uplink AUTH RSP	1070.2
Uplink AUTH RSP->downlink CIPH MODE CMD	80.2

Signaling	delay（ms）
Downlink CIPH MODE CMD->uplinnk CIPH MODE CMP	626
Uplink CIPH MODE CMP->downlink Setup	240
Uplink Setup->downlink Call Proceeding	85.3
downlink Call Proceeding->downlink CHAN ACT	814.9
Downlink CHAN ACT->uplink CHAN ACT ACK	8.8
Uplink CHAN ACT ACK->downlink ASS CMD	82.1
Downlink ASS CMD->uplink EST IND	256.3
Uplink EST IND->uplink ASS CMP	160.8
Uplink ASS CMP->downlink Alerting	4097

Copyright © 2008 Huawei Technologies Co., Ltd. All rights reserved.

Confidential Information of Huawei. No Spreading Without Permission

Call Setup Delay

- Network parameters that affect Call setup delay

BS-PA-MFRARMS	This parameter specifies the number of multi-frames in a cycle on the paging sub-channel. If this parameter is set to a high value, the average paging delay is great. Therefore, the MS to MS call setup delay and the PSTN to MS call setup delay are prolonged. By default, this parameter is set to 2.
Use Imm_Ass Retransmit Parameter	This parameter determines whether the BSC sends the immediate assignment parameter to the BTS. If this parameter is set to Yes, the BSC sends the immediate assignment parameter to the BTS; if it is set to No, the BSC does not send the immediate assignment parameter to the BTS. By default, this parameter is set to No.

Copyright © 2008 Huawei Technologies Co., Ltd. All rights reserved.

Confidential Information of Huawei. No Spreading Without Permission

Call Setup Delay

- Network parameters that affect Call setup delay

Max Delay of Imm_Ass Retransmit, Max Transmit Times of Imm_Ass	These parameters determine the number of retransmissions of immediate assignment messages and the maximum delay of retransmitting the immediate assignment message. When the network quality during the test is poor and an immediate assignment message needs to the retransmitted, these parameters determine the maximum delay of the retransmission. If these parameters are set to high values, the average call setup delay may be prolonged. During the test, set these parameters to low values. By default, Max Delay of Imm_Ass Retransmit is set to 4 , that is, 1000 ms, and Max Transmit Times of Imm_Ass is set to 2. These parameters are set in the table of cell attributes.

Copyright © 2008 Huawei Technologies Co., Ltd. All rights reserved.

Confidential Information of Huawei. No Spreading Without Permission

Call Setup Delay

- Network functions that affect Call setup delay

Late assignment procedure	Currently in the industry, Call Setup Delay is measured as the interval between the transmission of the Channel Request message and the reception of the Alerting message. The measurement is performed in the early assignment procedure and the very early assignment procedure. In the late assignment procedure, the reception of the Alerting message does not necessarily indicate the establishment of a call; therefore, Call Setup Delay is not measured in the late assignment procedure.
Handover	If a handover is performed during the test, the call setup delay is prolonged. Handovers should be avoided during the test. The baseline data is obtained in the dialing tests at a fixed point; thus no handover is performed.

Copyright © 2008 Huawei Technologies Co., Ltd. All rights reserved.

Confidential Information of Huawei. No Spreading Without Permission

Call Setup Delay

- Network functions that affect Call setup delay

Authentication, encryption, classmark update, and TMSI reallocation	These procedures prolong the call setup delay; therefore, these functions are usually disabled during the test. These procedures are enabled on the core network. The baseline data is obtained when these procedures are disabled. If only the authentication procedure is enabled, the call setup delay is prolonged by 1,070 ms. If only the encryption procedure is enabled, the call setup delay is prolonged by 600 ms. If only the TMSI reallocation procedure is enabled, the call setup delay is prolonged by 600 ms. If only the classmark update procedure is enabled, the call setup delay is prolonged by 600 ms.

Copyright © 2008 Huawei Technologies Co., Ltd. All rights reserved.

Confidential Information of Huawei. No Spreading Without Permission

Call Setup Delay

- Network functions that affect Call setup delay

Concentric cell	If system optimization is used in the assignment procedure, the decision on whether the overlaid subcell or the underlaid subcell should be assigned prolongs the call setup delay. The time taken in making the decision should be considered in the acceptance and test. In the BSC32 versions earlier than the R007C01, if system optimization is used, the SDCCH measurement report should be used to decide whether the overlaid subcell or the underlaid subcell should be assigned; therefore, the call setup delay in concentric cells is prolonged by 1s. With optimization in the BSC32R007C01 and later versions, the call setup delay in concentric cells is the same as that in normal cells. In the commercial release of the BSC6000, the call setup delay in concentric cells is the same as that in normal cells.

Copyright © 2008 Huawei Technologies Co., Ltd. All rights reserved.

Confidential Information of Huawei. No Spreading Without Permission

Call Setup Delay

- Network functions that affect Call setup delay

Immediate Assignment Opt.	This function must be enabled when satellite transmission is used. If this function is enabled, the BSC directly sends an IMM ASS CMD message to the MS without waiting for the CHAN ACTIV ACK message from the BTS. Therefore, the call setup delay is shortened. By default, this function is disabled. It is recommended that this function be enabled only in satellite transmission mode.
Reassignment	In a network with poor quality, TCH reassignment for a call during the test prolongs the call setup delay, thus prolonging the average call setup delay. However, this function can be enabled to increase the assignment success rate. It is recommended that this function be disabled in the measurement of the call setup delay. By default, this function is enabled.

Copyright © 2008 Huawei Technologies Co., Ltd. All rights reserved.

Confidential Information of Huawei. No Spreading Without Permission

Content

- Paging Success Rate
- SDCCH Availability
- SDCCH Congestion Rate
- Immediate Assignment Success Rate
- SDCCH Call Drop Rate
- TCH Availability
- TCH Congestion Rate
- TCH Assignment Success Rate
- TCH Call Drop Rate
- Handover Success Rate
- Success Rate of Call Setup
- Call Setup Delay
- **Call Complete Success Rate**

Copyright © 2008 Huawei Technologies Co., Ltd. All rights reserved.

Confidential Information of Huawei. No Spreading Without Permission

Call Complete Success Rate

- Definition
  - Call Complete Establishment Success Rate is abbreviated as CCSR, which is the ratio of the number of established calls to the total number of initiated calls:
    - = Success Rate of Call Establishment x (1 – Call Drop Ratio on TCH)
    - = (1 - Congestion Ratio on SDCCH) x (1 - Call Drop Ratio on SDCCH)x (1 - Congestion Ratio on TCH) x (1 - Call Drop Ratio on TCH per cell (Including Handover))

Copyright © 2008 Huawei Technologies Co., Ltd. All rights reserved. HUAWEI

A complete call procedure starts from the initiation of a call or the response to the paging to the moment of hangup.

This counter is an important retainability KPI, which directly indicates the probability of complete calls. This counter directly affects user experience.

Confidential Information of Huawei. No Spreading Without Permission

Call Complete Success Rate

- Measurement Point
  - The Call Complete Establishment Success Rate is a comprehensive counter. For its measurement point, refer to those of the specific counters.
    - SDCCH Congestion Rate
    - SDCCH Call Drop Rate
    - TCH Congestion Rate
    - TCH Call Drop Rate

Copyright © 2008 Huawei Technologies Co., Ltd. All rights reserved.

Confidential Information of Huawei. No Spreading Without Permission

Call Complete Success Rate

- Network Parameters That affect Call Complete Success Rate

RXLEV_ACCESS_MIN, RACH Min Access Level, RACH Busy Threshold, and Random Access Error Threshold	The settings of these parameters affect the coverage area. If these parameter are set to high values, the actual coverage area of the network becomes small; if these parameter are set to low values, call drops are likely to occur because of invalid access or too weak access signals, thus decreasing the Call Complete Establishment Success Rate.
Thresholds related to the handover	Inappropriate settings of these thresholds may cause frequent or untimely handovers; therefore, call drops are likely to occur and the Call Complete Establishment Success Rate decreases.
BA2 table	If neighbor cell relations are incomplete, some handovers cannot be performed and thus call drops occur. Therefore, complete neighbor cell relations must be defined.

Copyright © 2008 Huawei Technologies Co., Ltd. All rights reserved.

Confidential Information of Huawei. No Spreading Without Permission

Call Complete Success Rate

- Network Parameters That affect Call Complete Success Rate

Radio link timeout	If this timer is set to a lower value, a call drop is likely to occur when the receive level of the MS attenuates greatly because of the terrain. If this parameter is set to a higher value, the network can release the related resources only after the timer expires though the speech quality is unsatisfactory. Therefore, the utilization of resources is decreased. It is recommended that you set the parameter to a higher value in the rural areas with low traffic volume and to a lower value in the areas with high traffic volume.
SACCH multi-frames	The use of this parameter is the same as Radio Link Timeout.

Copyright © 2008 Huawei Technologies Co., Ltd. All rights reserved.

Confidential Information of Huawei. No Spreading Without Permission

Call Complete Success Rate

- Network Parameters That affect Call Complete Success Rate

Power boost before handover	This function can be used to significantly reduce call drops in the areas with high traffic volume and increase the Call Complete Establishment Success Rate; however, this function does not take much effect in the areas with low traffic volume. Interference may be caused when this function is enabled. This function is recommended in the areas with high traffic volume.
Concentric cell	In concentric cells, the coverage of the underlaid subcell is different from that of the overlaid subcell; therefore, call drops are likely to occur and the Call Complete Establishment Success Rate is decreased. It is recommended that appropriate cell parameters be set to reduce call drops in concentric cells.

Copyright © 2008 Huawei Technologies Co., Ltd. All rights reserved.

Confidential Information of Huawei. No Spreading Without Permission

Call Complete Success Rate

- Network Parameters That affect Call Complete Success Rate

Directed retry	When congestion occurs in a cell, the Directed Retry procedure can be initiated to hand over the current call to another cell, thus increasing the Call Complete Establishment Success Rate. For the BSC6000, thresholds can be set to automatically trigger the directed retry procedure. You can modify the settings of parameters to adjust the load in a cell. It is recommended that this function be enabled.
SDCCH dynamic adjustment	This function is used to relieve the congestion of SDCCHs, thus ensuring the access to the signaling channel and increasing the Call Complete Establishment Success Rate. To ensure sufficient SDCCHs for normal running of other services, this function is enabled by default.

Copyright © 2008 Huawei Technologies Co., Ltd. All rights reserved.

Confidential Information of Huawei. No Spreading Without Permission

Call Complete Success Rate

- Other KPIs That affect Call Complete Success Rate

Paging Success Rate	A high Paging Success Rate decreases the Success Rate of Call Setup (Immediate Assignment) and Call Drop Ratio on TCH per cell, thus decreasing the Call Complete Establishment Success Rate.

Copyright © 2008 Huawei Technologies Co., Ltd. All rights reserved.

Confidential Information of Huawei. No Spreading Without Permission

Summary

- Analysis of KPIs in Traffic Measurement
  - Definition of each KPI, and their impact on the subscriber and the network
  - Classification and measurement point of the important KPIs
  - Environment elements that affect the KPIs
  - Important network parameters that affect the KPIs
  - Important network functions that affect the KPIs
  - Mutual affect between KPIs

Copyright © 2008 Huawei Technologies Co., Ltd. All rights reserved.

Confidential Information of Huawei. No Spreading Without Permission

Thank you

www.huawei.com

Confidential Information of Huawei. No Spreading Without Permission